Concert Lighting Systems Australia Pty Ltd

September 2026 Pricelist Table of Contents

CLS Truss	**Page**
Flat Truss	2
Tri Truss	3-4
Box Truss	4-8
Base Plates	9
Ground Support	9
CLS Stage Deck	10-11
CLS Lighting Ladders and Carts	12
CLS Stands	12-13
CLS Rigging Accessories	
Eye Bolts, Eye Nuts, Girder Clamps	13
Span Sets, Shackles, Wire Rope	14
Steel & Alloy Tube	14
Safety Wires, FSWR's	15
Shot Bags, Velcro Cable Ties, Chain Blocks	16
CLS Motor Controllers	16
CLS Clamps & Couplers	
Hook Clamps	17
Boom Arms	17
Forged Couplers	17
Alloy/Black Couplers	17-18
Mirror Balls & Motors	19
Chauvet LED Fixtures	
Chauvet Lighting Accessories	19-21
ShowPro LED Fixtures	22-23
Showtec LED Fixtures	23
Infinity LED Fixtures	24
LSC Consoles, Dimmers & Power Distribution	25
Avolites T3 Consoles	25
Tapes	26-27
LEE & Rosco Lighting Filters	27-28
Power & Control Cable	
Flex, Plugs & Sockets, Socapex Multicores	29
Wieland Multicores, 3 Phase Extensions	30
Motor Cable Extensions	31
DMX (XLR) Extensions	31
240V Extension Leads, IEC, Powercon, True1 Leads	32
Lamps	33-34
Smoke, Haze & Bubble Fluids	35
Smoke, Haze & Bubble Machines	36
Assorted Rosco Products	37

Code	Product Description	Weight	Trade Ex-GST	Trade Inc-GST
	CLS ALLOY TRUSS			
	ALLOY LADDER BEAM			
	ALLOY FLAT TRUSS (150mm C-C) (Main Chords from Alloy Tube 50 x 3mm)			
TR318	6m Alloy Ladder Beam	16.5Kg	**813.20**	**894.52**
TR319	5m Alloy Ladder Beam	13.8Kg	**729.30**	**802.23**
TR320	4m Alloy Ladder Beam	11.1Kg	**645.30**	**709.83**
TR321	3m Alloy Ladder Beam	8.4Kg	**561.40**	**617.54**
TR322	2m Alloy Ladder Beam	5.7Kg	**477.50**	**525.25**
TR323	1m Alloy Ladder Beam	3.0Kg	**393.60**	**432.96**
	COUPLINGS & PINS			
TR324	Egg Coupler (2 required per join) - each		**10.30**	**11.33**
TR325	Tapered Pin & R-Clip		**3.10**	**3.41**
	ALLOY FLAT TRUSS			
	ALLOY FLAT TRUSS (300mm C-C) (Main Chords from Alloy Tube 50 x 3mm)			
TR19	6m Alloy Flat Truss		**808.50**	**889.35**
TR109	3m Alloy Flat Truss		**552.40**	**607.64**
TR89	2m Alloy Flat Truss		**467.00**	**513.70**
TR108	1.5m Alloy Flat Truss		**425.60**	**468.16**
TR119	1m Alloy Flat Truss		**383.00**	**421.30**
	PINS & BOLTS			
TR38	Truss Pin (2 required per join) - each		**7.20**	**7.92**
TR41	Truss Bolt Set High Tensile (2 required per join) - each		**4.00**	**4.40**
	FLAT TRUSS ACCESSORIES			
TR43	Flat Truss Winch Up Adaptor		**253.00**	**278.30**
TR230	90 Deg Flat Truss Joiners		**149.00**	**163.90**
	ALLOY FLAT TRUSS HEAVY DUTY (300mm C-C) (Main Chords from Alloy Tube 48.4 x 4.45mm)			
TR20	6m Alloy Flat Truss Heavy Duty	24.3Kg	**808.50**	**889.35**
TR231	5m Alloy Flat Truss Heavy Duty	20.5Kg	**723.10**	**795.41**
TR239	4m Alloy Flat Truss Heavy Duty	16.7Kg	**637.60**	**701.36**
TR94	3m Alloy Flat Truss Heavy Duty	12.4Kg	**552.40**	**607.64**
TR137	2m Alloy Flat Truss Heavy Duty	8.6Kg	**467.00**	**513.70**
TR95	1.5m Alloy Flat Truss Heavy Duty	6.5kg	**425.60**	**468.16**
TR138	1m Alloy Flat Truss Heavy Duty	4.6kg	**383.00**	**421.30**
	PINS & BOLTS			
TR96	Truss Pin (2 required per join) - each		**7.20**	**7.92**
TR41	Truss Bolt Set High Tensile (2 required per join) - each		**4.00**	**4.40**
	FLAT TRUSS ACCESSORIES			
TR43	Flat Truss Winch Up Adaptor	2.3Kg	**253.00**	**278.30**
TR230	90 Deg Joiners		**149.00**	**163.90**
	CURVED ALLOY FLAT TRUSS "HORIZONTAL" HEAVY DUTY (300mm C-C) (Main Chords from Alloy Tube 48.4 x 4.45mm)			
CAF09	2.5m Radius Curved Section (5m dia. 90 deg or 4 sections to circle)		**957.20**	**1,052.92**
CAF06	2m Radius Curved Section (4m dia. 90 deg or 4 sections to circle)		**829.10**	**912.01**
CAF07	1.5m Radius Curved Section (3m dia. 90 deg or 4 sections per circle)		**765.70**	**842.27**
CAF08	1m Radius Curved Section (2m dia. 90 deg or 4 sections per circle)		**637.60**	**701.36**
	CURVED ALLOY FLAT TRUSS "VERTICAL" HEAVY DUTY (300mm C-C) (Main Chords from Alloy Tube 48.4 x 4.45mm)			
CAF10	2.5m Radius Curved Section (5m dia. 90 deg or 4 sections to circle)		**957.20**	**1,052.92**
CAF11	2m Radius Curved Section (4m dia. 90 deg or 4 sections to circle)		**829.10**	**912.01**
CAF12	1.5m Radius Curved Section (3m dia. 90 deg or 4 sections per circle)		**765.70**	**842.27**
CAF13	1m Radius Curved Section (2m dia. 90 deg or 4 sections per circle)		**637.60**	**701.36**

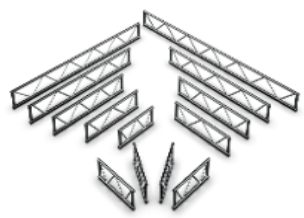

Code	Product Description	Weight	Trade Ex-GST	Trade Inc-GST
	ALLOY TRI TRUSS			
	ALLOY TRI TRUSS (250mm C-C) (Main Chords from Alloy Tube 50 x 3mm)			
TR122	3m Tri Truss Section		**908.90**	**999.79**
TR80	2m Tri Truss Section		**771.20**	**848.32**
TR81	1m Tri Truss Section		**633.60**	**696.96**
	PINS & BOLTS			
TR38	Truss Pin (3 required per join) - each		**7.20**	**7.92**
TR41	Truss Bolt High Tensile (4 required per join) - each		**4.00**	**4.40**
	ALLOY TRI TRUSS (300MM C-C)			
	ALLOY TRI TRUSS (300mm C-C) (Main Chords from Alloy Tube 50 x 3mm)			
TR73	6m Tri Truss Section		**1,322.00**	**1,454.20**
TR123	5m Tri Truss Section	25Kg	**1,184.20**	**1,302.62**
TR124	4m Tri Truss Section	20Kg	**1,046.70**	**1,151.37**
TR23	3m Tri Truss Section	16Kg	**908.90**	**999.79**
TR91	2.5m Tri Truss Section	14.5Kg	**840.00**	**924.00**
TR54	2.25m Tri Truss Section	13.2Kg	**805.60**	**886.16**
TR82	2m Tri Truss Section	12.5Kg	**771.20**	**848.32**
TR24	1.5m Tri Truss Section	8Kg	**702.50**	**772.75**
TR83	1m Tri Truss Section	7.5Kg	**633.60**	**696.96**
TR84	0.75m Tri Truss Section	5.5Kg	**599.20**	**659.12**
TR134	0.5m Tri Truss Section	4Kg	**564.80**	**621.28**
TR200	0.3m Tri Truss Section	3.8Kg	**537.10**	**590.81**
	CORNERS			
TR65	90º Vertical Corner (Apex Up)	5Kg	**688.50**	**757.35**
TR66	90º Vertical Corner (Apex Down)	5Kg	**688.50**	**757.35**
TR53	90º Horizontal Corner	8Kg	**688.50**	**757.35**
TR163	60º Horizontal Corner	6Kg	**791.90**	**871.09**
TR78	45º Horizontal Corner	6Kg	**895.10**	**984.61**
TR79	135º Horizontal Corner	6Kg	**723.10**	**795.41**
TR92	3 Way Corner (Right)	12Kg	**1,032.80**	**1,136.08**
TR93	3 Way Corner (Left)	12Kg	**1,032.80**	**1,136.08**
TR25	Snaplok Joiner (Apex Down)	4.5Kg	**516.40**	**568.04**
TR164	Snaplok Joiner (Apex Up)	4.5Kg	**516.40**	**568.04**
TR72	Alloy 6 Way Cube	14Kg	**867.60**	**954.36**
TR102	T - Section (Horizontal)	10Kg	**943.40**	**1,037.74**
TR75	T - Section (Apex Down)	10Kg	**943.40**	**1,037.74**
TR76	4 Way Cross Section	13Kg	**1,170.50**	**1,287.55**
TR226	Alloy Tri Truss Hinge Joiner (from 12mm Alloy Plate)	7.2Kg	**717.20**	**788.92**
TR316	Alloy Universal Tri/Box Truss Hinge Joiner (from 12mm Alloy Plate)	8.8Kg	**717.20**	**788.92**
	HOCKER CORNERS - 18 DEGREE JOINERS			
TR150	3 Way Tri Truss Hocker Corner (Left)	10.5Kg	**1,170.50**	**1,287.55**
TR151	3 Way Tri Truss Hocker Corner (Right)	10.5Kg	**1,170.50**	**1,287.55**
TR152	3 Way Tri Truss Hocker Corner (Peak)	10.3Kg	**1,170.50**	**1,287.55**
TR201	4 Way Tri Truss Hocker (Knee)	13.3Kg	**1,377.00**	**1,514.70**
TR202	4 Way Tri Truss Hocker (Peak)	12.7Kg	**1,377.00**	**1,514.70**
TR228	5 Way Plated Tri Truss Hocker (Knee)	17.7Kg	**1,154.10**	**1,269.51**
TR229	4 Way Plated Tri Truss Hocker (Peak)	17.7Kg	**1,344.30**	**1,478.73**
	TRI TRUSS ACCESSORIES			
TR74	Linton Ring (To suit Alloy Tri Truss) 1m Dia.	5.0Kg	**425.60**	**468.16**
TR165	Hanging Plate (Apex Down) Chrome Plated	2.3Kg	**217.50**	**239.25**
TR166	Hanging Plate (Apex Up) Chrome Plated	2.3Kg	**217.50**	**239.25**
TR44	Tri Truss Winch Up Adaptor	3.6Kg	**197.80**	**217.58**
TR111	Suspension Bracket - Universal (Suits Tri & Box Truss)	5.9Kg	**610.00**	**671.00**
TR223	Lifting Bar c/w 2 x Alloy Couplers	3.6Kg	**244.40**	**268.84**
TR153	Tri Truss Screw Jack Adaptor	4.2Kg	**247.10**	**271.81**
TR406	2m Lycra Tri Truss Sock. (Black or White available)		**52.50**	**57.75**
TR390	3m Lycra Tri Truss Sock. (Black or White available)		**73.30**	**80.63**
	PINS & BOLTS			
TR38	Truss Pin (3 required per join) - each	0.162Kg	**7.20**	**7.92**
TR41	Truss Bolt High Tensile (4 required per join) - each	0.098Kg	**4.00**	**4.40**
TR88	Truss Cube Bolt	0.067Kg	**3.80**	**4.18**
TR71	Base Bolt & Washer		**2.00**	**2.20**
TR232	Washer (High Tensile)		**0.30**	**0.33**
TR297	Wing Nut (1/2" UNC)		**2.20**	**2.42**
	MAC OMEGA ADAPTOR BRACKET			
MAC40	Mac Omega Adaptor Bracket to end of Tri Truss (Does not include Omega Clamp)		**213.60**	**234.96**

Code	Product Description	Weight	Trade Ex-GST	Trade Inc-GST
	ALLOY TRI TRUSS TEE PEE (300MM C-C)			
TR391	Hinged Top Bracket c/w M20 Rigging Eye		**871.30**	**958.43**
TR392	Steel Truss Feet c/w M20 Rigging Eye		**281.90**	**310.09**
TR395	4.0m Wire Rope Sling to suit 6m Tee Pee		**49.20**	**54.12**
TR396	4.9m Wire Rope Sling to suit 7.5m Tee Pee		**52.80**	**58.08**
TR397	5.7m Wire Rope Sling to suit 9m Tee Pee		**56.40**	**62.04**
TR398	6.6m Wire Rope Sling to suit 10.5m Tee Pee		**60.00**	**66.00**
TR399	7.4m Wire Rope Sling to suit 12m Tee Pee		**63.60**	**69.96**
	CURVED ALLOY TRI TRUSS (300MM C-C)			
	CURVED ALLOY TRI TRUSS (300mm C-C) (Main Chords from Alloy Tube 50 x 3mm)			
CT05	7.5m Radius Curved Section(15m dia. 30 deg or 12 sections per circle required)		**1,602.90**	**1,763.19**
CT03	5m Radius Curved Section (10m dia. 45 deg or 8 sections per circle required)	21Kg	**1,602.90**	**1,763.19**
CT08	4m Radius Curved Section (8m dia. 45 deg or 8 sections per circle required)	16.5Kg	**1,374.50**	**1,511.95**
CT02	3.5m Radius Curved Section (7m dia. 90 deg or 4 sections per circle required)	28.5Kg	**2,060.10**	**2,266.11**
CT04	3m Radius Curved Section (6m dia. 90 deg or 4 sections per circle required)	25Kg	**1,831.40**	**2,014.54**
CT09	2.5m Radius Curved Section (5m dia. 90 deg or 4 sections per circle required)	20Kg	**1,601.50**	**1,761.65**
CT01	2m Radius Curved Section (4m dia. 90 deg or 4 sections per circle required)	16.5Kg	**1,374.50**	**1,511.95**
CT07	1.5m Radius Curved Section (3m dia. 90 deg or 4 sections per circle required)	13Kg	**1,202.30**	**1,322.53**
CT06	1m Radius Curved Section (2m dia. 90 deg or 4 sections per circle required)	9Kg	**1,030.20**	**1,133.22**
TR315	Short Truss Pin to suit Curved Sections		**6.00**	**6.60**
	ALLOY TRI TRUSS (400MM C-C)			
	ALLOY TRI TRUSS (400mm C-C) (Main Chords from Alloy Tube 50 x 3mm)			
TR217	6m Alloy Tri Truss Section		**1,730.90**	**1,903.99**
TR213	3m Alloy Tri Truss Section		**1,063.10**	**1,169.41**
TR214	2.25m Alloy Tri Truss Section		**896.60**	**986.26**
TR233	2m Alloy Tri Truss Section		**840.00**	**924.00**
TR215	1.5m Alloy Tri Truss Section		**716.20**	**787.82**
TR234	1m Alloy Tri Truss Section		**608.80**	**669.68**
TR216	0.75m Alloy Tri Truss Section		**552.40**	**607.64**
TR235	0.5m Alloy Tri Truss Section		**495.80**	**545.38**
	CORNERS			
TR236	T-Section (Apex Down)		**970.80**	**1,067.88**
	FLATSCREEN TRI TRUSS UPRIGHT & BASE			
TR285	2m Flatscreen Tri Truss Upright	8.4Kg	**595.10**	**654.61**
TR296	Square Tri Truss Base (700 x 700 x 6mm)	24Kg	**358.50**	**394.35**
	CLS ALLOY BOX TRUSS			
	ALLOY BABY BOX TRUSS (144MM C-C)			
	ALLOY BABY BOX TRUSS (144mm C-C) (Main Chords from Alloy Tube 25 x 3mm)			
TR154	4m Alloy Baby Box Truss Section	12Kg	**597.70**	**657.47**
TR155	3m Alloy Baby Box Truss Section	9Kg	**526.30**	**578.93**
TR220	2.5m Alloy Baby Box Truss Section	8Kg	**490.30**	**539.33**
TR221	2.25m Alloy Baby Box Truss Section	7.5Kg	**473.80**	**521.18**
TR156	2m Alloy Baby Box Truss Section	6.6Kg	**456.00**	**501.60**
TR157	1.5m Alloy Baby Box Truss Section	5Kg	**384.40**	**422.84**
TR158	1m Alloy Baby Box Truss Section	3.7Kg	**314.10**	**345.51**
TR159	0.5m Alloy Baby Box Truss Section	2Kg	**242.60**	**266.86**
	CORNERS & LINTON RINGS			
TR160	Alloy 6 Way Cube	3.25Kg	**433.90**	**477.29**
TR161	Linton Ring 650mm Diameter		**414.70**	**456.17**
	BOLTS			
TR185	Bolt Set (includes bolt, 2 washers & hex nut)		**2.40**	**2.64**
TR224	Base Bolt Set		**2.20**	**2.42**

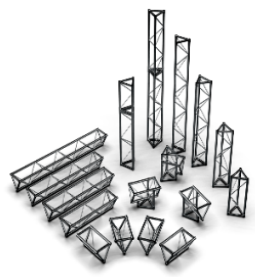

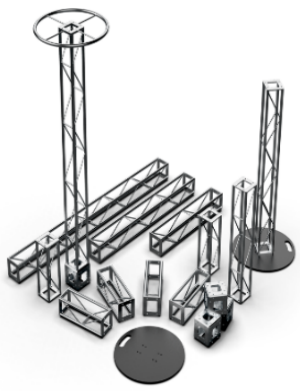

Code	Product Description	Weight	Trade Ex-GST	Trade Inc-GST
	ALLOY BOX TRUSS (200MM C-C)			
	ALLOY BOX TRUSS (200mm C-C) (Main Chords from Alloy Tube 50 x 3mm)			
TR240	6m Alloy Box Truss Section		**1,607.00**	**1,767.70**
TR241	5m Alloy Box Truss Section		**1,414.20**	**1,555.62**
TR242	4m Alloy Box Truss Section		**1,222.80**	**1,345.08**
TR243	3m Alloy Box Truss Section	20Kg	**1,031.50**	**1,134.65**
TR244	2.5m Alloy Box Truss Section	17.3Kg	**972.30**	**1,069.53**
TR245	2.25m Alloy Box Truss Section		**935.20**	**1,028.72**
TR246	2m Alloy Box Truss Section	14.3Kg	**889.60**	**978.56**
TR247	1.5m Alloy Box Truss Section	11.5Kg	**809.70**	**890.67**
TR248	1m Alloy Box Truss Section	8.5Kg	**723.10**	**795.41**
TR249	0.75m Alloy Box Truss Section	7Kg	**683.10**	**751.41**
TR250	0.5m Alloy Box Truss Section	5.7Kg	**640.50**	**704.55**
	CORNERS			
TR252	Alloy 6 Way Cube	6.8Kg	**650.80**	**715.88**
	PINS & BOLTS			
TR38	Truss Pin (4 required per join) - each		**7.20**	**7.92**
TR41	Truss Bolt High Tensile (4 required per join) - each		**4.00**	**4.40**
TR88	Truss Cube Bolt		**3.80**	**4.18**
	ACCESSORIES			
TR305	Lifting Bar c/w 2 x Alloy Couplers	2.8Kg	**237.00**	**260.70**
TR378	Box Truss Hinge Joiner		**554.20**	**609.62**

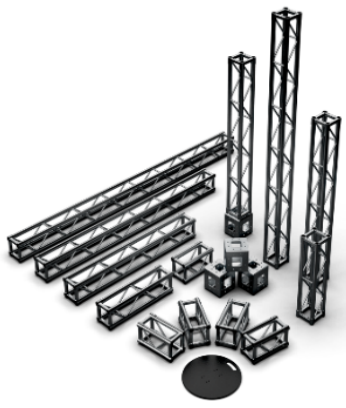

	ALLOY BOX TRUSS HEAVY DUTY (300MM C-C)			
	ALLOY BOX TRUSS HEAVY DUTY (300MM C-C) (Main Chords from Alloy Tube 48.4 x 4.45mm)			
TR189	6m Alloy Box Truss Section **(Heavy Duty)**	63Kg	**2,010.50**	**2,211.55**
TR190	5m Alloy Box Truss Section **(Heavy Duty)**	53Kg	**1,770.90**	**1,947.99**
TR191	4m Alloy Box Truss Section **(Heavy Duty)**	43Kg	**1,530.00**	**1,683.00**
TR192	3m Alloy Box Truss Section **(Heavy Duty)**	33Kg	**1,290.40**	**1,419.44**
TR193	2.5m Alloy Box Truss Section **(Heavy Duty)**	28Kg	**1,217.30**	**1,339.03**
TR194	2.25m Alloy Box Truss Section **(Heavy Duty)**	25.5Kg	**1,170.50**	**1,287.55**
TR195	2m Alloy Box Truss Section **(Heavy Duty)**	23Kg	**1,115.50**	**1,227.05**
TR196	1.5m Alloy Box Truss Section **(Heavy Duty)**	18Kg	**1,013.70**	**1,115.07**
TR197	1m Alloy Box Truss Section **(Heavy Duty)**	13Kg	**903.40**	**993.74**
TR198	0.75m Alloy Box Truss Section **(Heavy Duty)**	10.25Kg	**858.10**	**943.91**
TR199	0.5m Alloy Box Truss Section **(Heavy Duty)**	8Kg	**803.00**	**883.30**
	CORNERS			
TR376	Alloy 6 Way Cube **(Heavy Duty)**	19.8Kg	**1,184.20**	**1,302.62**
TR377	90Deg Universal Corner **(Heavy Duty)**		**1,114.00**	**1,225.40**
	PINS & BOLTS			
TR96	Truss Pin (4 required per join) - each		**7.20**	**7.92**
TR298	Truss Bolt M16 x 160 - High Tensile (4 required per join) - each		**5.00**	**5.50**

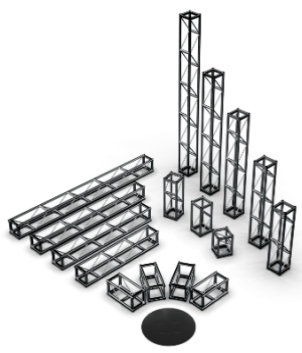

	5 - CHORD ALLOY BOX TRUSS HEAVY DUTY (300MM C-C)			
	5-CHORD ALLOY BOX TRUSS HEAVY DUTY (300MM C-C) (Main Chords from Alloy Tube 48.4 x 4.45mm)			
TR349	6m 5-Chord Alloy Box Truss Section **(Heavy Duty)**	73Kg	**2,621.10**	**2,883.21**
TR350	5m 5-Chord Alloy Box Truss Section **(Heavy Duty)**	61Kg	**2,245.80**	**2,470.38**
TR351	4m 5-Chord Alloy Box Truss Section **(Heavy Duty)**	49.5Kg	**1,936.90**	**2,130.59**
TR352	3m 5-Chord Alloy Box Truss Section **(Heavy Duty)**	38Kg	**1,629.60**	**1,792.56**
TR353	2.5m 5-Chord Alloy Box Truss Section **(Heavy Duty)**	32Kg	**1,556.60**	**1,712.26**
TR354	2.25m 5-Chord Alloy Box Truss Section **(Heavy Duty)**	29Kg	**1,441.90**	**1,586.09**
TR355	2m 5-Chord Alloy Box Truss Section **(Heavy Duty)**	26Kg	**1,386.80**	**1,525.48**
TR356	1.5m 5-Chord Alloy Box Truss Section **(Heavy Duty)**	20.5Kg	**1,217.10**	**1,338.81**
TR357	1m 5-Chord Alloy Box Truss Section **(Heavy Duty)**	14.5Kg	**1,039.20**	**1,143.12**
TR358	0.75m 5-Chord Alloy Box Truss Section **(Heavy Duty)**	11.5Kg	**993.70**	**1,093.07**
TR359	0.5m 5-Chord Alloy Box Truss Section **(Heavy Duty)**	8.5Kg	**870.90**	**957.99**

Code	Product Description	Weight	Trade Ex-GST	Trade Inc-GST
	ELEMENT ALLOY BOX TRUSS (300MM C-C)			
	ELEMENT ALLOY BOX TRUSS (300MM C-C) (Main Chords from Alloy Tube 50 x 3mm)			
TR255	6m Element Alloy Box Truss Section	40Kg	**1,676.20**	**1,843.82**
TR256	5m Element Alloy Box Truss Section	34Kg	**1,477.00**	**1,624.70**
TR257	4m Element Alloy Box Truss Section	28Kg	**1,277.90**	**1,405.69**
TR258	3m Element Alloy Box Truss Section	22Kg	**1,077.30**	**1,185.03**
TR259	2.5m Element Alloy Box Truss Section	18.5Kg	**1,016.00**	**1,117.60**
TR260	2.25m Element Alloy Box Truss Section	17Kg	**976.30**	**1,073.93**
TR261	2m Element Alloy Box Truss Section	15.5Kg	**930.70**	**1,023.77**
TR262	1.5m Element Alloy Box Truss Section	13Kg	**845.40**	**929.94**
TR263	1m Element Alloy Box Truss Section	10Kg	**752.90**	**828.19**
TR264	0.75m Element Alloy Box Truss Section	8.8Kg	**715.90**	**787.49**
TR265	0.5m Element Alloy Box Truss Section	7Kg	**669.00**	**735.90**
TR266	0.3m Element Alloy Box Truss Section	6Kg	**623.40**	**685.74**
	PINS & BOLTS			
TR38	Truss Pin (4 required per join) - each		**7.20**	**7.92**
TR41	Truss Bolt High Tensile (4 required per join) - each		**4.00**	**4.40**
TR88	Truss Cube Bolt		**3.80**	**4.18**
TR71	Base Bolt & Washer		**2.00**	**2.20**
	CORNERS			
TR271	Alloy 6 Way Cube	14Kg	**867.50**	**954.25**
TR300	Box Truss Hinge Joiner (from 12mm Alloy Plate)	7.2Kg	**717.20**	**788.92**
TR316	Alloy Universal Tri/Box Truss Hinge Joiner (from 12mm Alloy Plate)	8.8Kg	**717.20**	**788.92**
TR275	Universal 90 Deg Corner	10Kg	**920.70**	**1,012.77**
TR276	Universal Box T - Piece	12Kg	**1,104.30**	**1,214.73**
TR277	4 Way Cross Joiner	15Kg	**1,354.60**	**1,490.06**
TR302	4 Way T Junction - Element		**1,340.40**	**1,474.44**
TR303	Universal 3 Way Corner - Element		**1,159.70**	**1,275.67**
	ACCESSORIES			
TR310	Linton Ring (To suit Alloy Box Truss) 1m Dia.	5.1Kg	**425.60**	**468.16**
TR111	Suspension Bracket - Universal (Suits Tri & Box Truss)	5.9Kg	**610.00**	**671.00**
TR283	Box Truss Winch Up Adaptor		**152.70**	**167.97**
TR284	Hanging Plate		**224.10**	**246.51**
TR223	Lifting Bar c/w 2 x Alloy Couplers	3.6Kg	**244.40**	**268.84**
SJ012	300mm Box Truss Screw Jack Adaptor		**266.50**	**293.15**
TR403	Slotted End Plate (to suit light or projector mounting)		**125.00**	**137.50**
TR407	2m Lycra Box Truss Sock. (Black or White available)		**65.00**	**71.50**
TR408	3m Lycra Box Truss Sock. (Black or White available)		**90.00**	**99.00**
	ALLOY BOX TRUSS TEE PEE (300MM C-C)			
TR393	Hinged Top Bracket c/w M20 Rigging Eye		**973.80**	**1,071.18**
TR394	Steel Truss Feet c/w M20 Rigging Eye		**333.20**	**366.52**
TR395	4.0m Wire Rope Sling to suit 6m Tee Pee		**49.20**	**54.12**
TR396	4.9m Wire Rope Sling to suit 7.5m Tee Pee		**52.80**	**58.08**
TR397	5.7m Wire Rope Sling to suit 9m Tee Pee		**56.40**	**62.04**
TR398	6.6m Wire Rope Sling to suit 10.5m Tee Pee		**60.00**	**66.00**
TR399	7.4m Wire Rope Sling to suit 12m Tee Pee		**63.60**	**69.96**
	5 - CHORD ELEMENT BOX TRUSS (300MM C-C)			
	ELEMENT 5-CHORD ALLOY BOX TRUSS (300MM C-C) (Main Chords from Alloy Tube 50 x 3mm)			
TR360	6m Element 5-Chord Alloy Box Truss Section	46.5Kg	**2,286.80**	**2,515.48**
TR361	5m Element 5-Chord Alloy Box Truss Section	39.5Kg	**1,952.00**	**2,147.20**
TR362	4m Element 5-Chord Alloy Box Truss Section	32.5Kg	**1,684.90**	**1,853.39**
TR363	3m Element 5-Chord Alloy Box Truss Section	25.5Kg	**1,416.50**	**1,558.15**
TR364	2.5m Element 5-Chord Alloy Box Truss Section	21.5Kg	**1,355.30**	**1,490.83**
TR365	2.25m Element 5-Chord Alloy Box Truss Section	19.5Kg	**1,247.60**	**1,372.36**
TR366	2m Element 5-Chord Alloy Box Truss Section	18Kg	**1,202.20**	**1,322.42**
TR367	1.5m Element 5-Chord Alloy Box Truss Section	14.5Kg	**1,048.80**	**1,153.68**
TR368	1m Element 5-Chord Alloy Box Truss Section	11Kg	**888.60**	**977.46**
TR369	0.75m Element 5-Chord Alloy Box Truss Section	9.5Kg	**851.50**	**936.65**
TR370	0.5m Element 5-Chord Alloy Box Truss Section	7.5Kg	**736.70**	**810.37**
TR371	0.3m Element 5-Chord Alloy Box Truss Section	6.5Kg	**691.20**	**760.32**
	CURVED ELEMENT ALLOY BOX TRUSS (300MM C-C)			
	CURVED ALLOY BOX TRUSS (300MM C-C) (Main Chords from Alloy Tube 50 x 3mm)			
CT14	4m Radius Curved Section (8m dia. 45 deg or 8 sections per circle required)		**1,686.20**	**1,854.82**
CT10	3m Radius Curved Section (6m dia. 90 deg or 4 sections per circle required)		**2,184.20**	**2,402.62**
CT11	2m Radius Curved Section (4m dia. 90 deg or 4 sections per circle required)		**1,662.00**	**1,828.20**
CT12	1.5m Radius Curved Section (3m dia. 90 deg or 4 sections per circle required)		**1,532.50**	**1,685.75**
CT13	1m Radius Curved Section (2m dia. 90 deg or 4 sections per circle required)		**1,401.60**	**1,541.76**

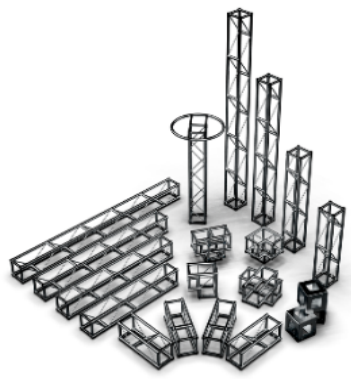

Code	Product Description	Weight	Trade Ex-GST	Trade Inc-GST
	ALLOY BOX TRUSS HEAVY DUTY (400MM C-C)			
	ALLOY BOX TRUSS HEAVY DUTY (400MM C-C) (Main Chords from Alloy Tube 48.4 x 4.47mm)			
TR131	6m Box Truss Section **Heavy Duty**	70Kg	**2,551.60**	**2,806.76**
TR132	5m Box Truss Section **Heavy Duty**	60Kg	**2,254.20**	**2,479.62**
TR118	4m Box Truss Section **Heavy Duty**	51Kg	**1,953.90**	**2,149.29**
TR117	3m Box Truss Section **Heavy Duty**	42Kg	**1,656.70**	**1,822.37**
TR116	2m Box Truss Section **Heavy Duty**	32Kg	**1,357.90**	**1,493.69**
TR181	1.5m Box Truss Section **Heavy Duty**	28Kg	**1,262.80**	**1,389.08**
TR115	1m Box Truss Section **Heavy Duty**	19Kg	**1,114.10**	**1,225.51**
TR326	0.5m Box Truss Section **Heavy Duty**	10Kg	**965.40**	**1,061.94**
	CORNERS			
TR135	6 Way Joiner Section **Heavy Duty**	23Kg	**1,790.10**	**1,969.11**
TR207	4 Way Joiner Section **Heavy Duty**	21Kg	**1,377.00**	**1,514.70**
TR317	Alloy Universal Tri/Box Truss Hinge Joiner (from 12mm Alloy Plate)		**909.60**	**1,000.56**
TR387	30 Degree Wedge **Heavy Duty**		**1,313.40**	**1,444.74**
TR388	45 Degree Wedge **Heavy Duty**	12.8Kg	**1,365.90**	**1,502.49**
TR389	60 Degree Wedge **Heavy Duty**		**1,418.40**	**1,560.24**
TR404	90 Degree Corner **Heavy Duty**		**950.00**	**1,045.00**
	BOLTS			
TR100	Truss Bolt M16 x 65 High Tensile (4 required per join) - each		**4.00**	**4.40**
	ACCESSORIES			
TR112	Suspension Bracket		**655.90**	**721.49**
TR309	Lifting Bar c/w 2 x Alloy Single Couplers	5.4Kg	**260.00**	**286.00**
SJ013	400mm H/D Box Truss Screw Jack Adaptor		**420.10**	**462.11**
	5 - CHORD ALLOY BOX TRUSS HEAVY DUTY (400MM C-C)			
	5-CHORD ALLOY BOX TRUSS HEAVY DUTY (400MM C-C) (Main Chords from Alloy Tube 48.4 x 4.47mm)			
TR341	6m 5-Chord Box Truss Section **Heavy Duty**	76Kg	**3,365.60**	**3,702.16**
TR342	5m 5-Chord Box Truss Section **Heavy Duty**	65Kg	**2,932.60**	**3,225.86**
TR343	4m 5-Chord Box Truss Section **Heavy Duty**	53Kg	**2,496.70**	**2,746.37**
TR344	3m 5-Chord Box Truss Section **Heavy Duty**	45Kg	**2,063.80**	**2,270.18**
TR345	2m 5-Chord Box Truss Section **Heavy Duty**	34Kg	**1,629.20**	**1,792.12**
TR346	1.5m 5-Chord Box Truss Section **Heavy Duty**	29.5Kg	**1,466.30**	**1,612.93**
TR347	1m 5-Chord Box Truss Section **Heavy Duty**	20Kg	**1,249.80**	**1,374.78**
TR348	0.5m 5-Chord Box Truss Section **Heavy Duty**	10.5Kg	**1,033.10**	**1,136.41**
	ELEMENT ALLOY BOX TRUSS (400MM C-C)			
	ELEMENT ALLOY BOX TRUSS (400MM C-C) (Main Chords from Alloy Tube 50 x 3mm)			
TR372	4m Element Alloy Box Truss Section		**1,469.50**	**1,616.45**
TR208	3m Element Alloy Box Truss Section		**1,238.80**	**1,362.68**
TR237	2.5m Element Alloy Box Truss Section		**1,168.50**	**1,285.35**
TR210	2m Element Alloy Box Truss Section		**1,070.30**	**1,177.33**
TR373	1.5m Element Alloy Box Truss Section		**972.10**	**1,069.31**
TR212	1m Element Alloy Box Truss Section		**865.70**	**952.27**
	CORNERS			
TR374	Universal 90 Deg Corner		**1,058.80**	**1,164.68**
TR375	Universal Box T - Piece		**1,269.90**	**1,396.89**
	TRUSS PINS & BOLTS			
TR38	Truss Pin (4 required per join) - each		**7.20**	**7.92**
TR41	Truss Bolt - High Tensile (4 required per join) - each		**4.00**	**4.40**
	ACCESSORIES			
TR112	Suspension Bracket		**655.90**	**721.49**
TR309	Lifting Bar c/w 2 x Alloy Single Couplers	5.4Kg	**260.00**	**286.00**
TR311	Alloy Box Truss Hinge Joiner (from 12mm Alloy Plate)		**955.00**	**1,050.50**

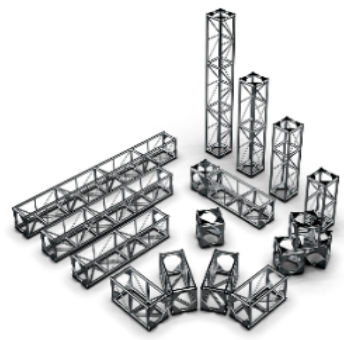

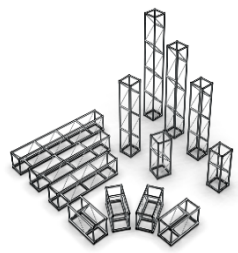

Code	Product Description	Weight	Trade Ex-GST	Trade Inc-GST
	ALLOY BOX TRUSS HEAVY DUTY (500MM C-C)			
	ALLOY BOX TRUSS HEAVY DUTY (500mm C-C) (Made with Alloy Tube 48.4 x 4.47mm)			
TR308	6m Box Truss Section **Heavy Duty**	84Kg	**2,836.50**	**3,120.15**
TR307	5m Box Truss Section **Heavy Duty**	71.5Kg	**2,504.70**	**2,755.17**
TR306	4m Box Truss Section **Heavy Duty**	59Kg	**2,172.90**	**2,390.19**
TR104	3m Box Truss Section **Heavy Duty**	46Kg	**1,841.20**	**2,025.32**
TR402	2.5m Box Truss Section **Heavy Duty**	39Kg	**1,716.80**	**1,888.48**
TR105	2m Box Truss Section **Heavy Duty**	34Kg	**1,509.40**	**1,660.34**
TR173	1.5m Box Truss Section **Heavy Duty**	25Kg	**1,403.20**	**1,543.52**
TR106	1m Box Truss Section **Heavy Duty**	21.5Kg	**1,213.20**	**1,334.52**
TR180	0.5m Box Truss Section **Heavy Duty**	17Kg	**1,072.70**	**1,179.97**
TR97	8ft Box Truss Section **Heavy Duty**	40Kg	**1,586.40**	**1,745.04**
TR178	6ft Box Truss Section **Heavy Duty**	32Kg	**1,454.10**	**1,599.51**
TR98	4ft Box Truss Section **Heavy Duty**	26Kg	**1,239.40**	**1,363.34**
TR179	2ft Box Truss Section **Heavy Duty**	20Kg	**1,027.40**	**1,130.14**
	CORNERS			
TR107	6 Way Joiner **Heavy Duty**	26Kg	**1,770.40**	**1,947.44**
TR99	4 Way Joiner **Heavy Duty**	22Kg	**1,377.00**	**1,514.70**
TR136	Alloy Box Truss Hinge Joiner (from 12mm Alloy Plate)	16Kg	**1,136.20**	**1,249.82**
TR384	7.5 Degree Wedge **Heavy Duty**	14Kg	**1,365.90**	**1,502.49**
TR385	22.5 Degree Wedge **Heavy Duty**	16Kg	**1,418.40**	**1,560.24**
TR386	45 Degree Wedge **Heavy Duty**	16.6Kg	**1,470.90**	**1,617.99**
TR405	90 Degree Corner **Heavy Duty**		**1,000.00**	**1,100.00**
	ACCESSORIES			
TR299	Lifting Bar c/w 2 x Alloy Couplers	6.3Kg	**275.50**	**303.05**
SJ014	500mm H/D Box Truss Screw Jack Adaptor		**430.90**	**473.99**
	BOLTS			
TR100	Truss Bolt M16 x 65 High Tensile (4 required per join) - each		**4.00**	**4.40**

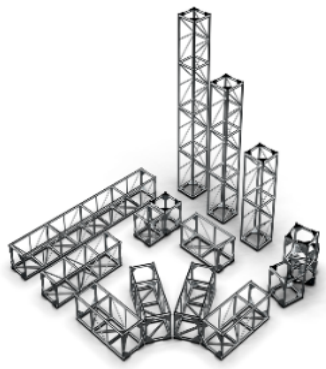

	5 - CHORD ALLOY BOX TRUSS HEAVY DUTY (500MM C-C)			
	5-CHORD ALLOY BOX TRUSS HEAVY DUTY (500mm C-C) (Made with Alloy Tube 48.4 x 4.47mm)			
TR329	6m 5-Chord Box Truss Section **Heavy Duty**	90Kg	**3,650.70**	**4,015.77**
TR330	5m 5-Chord Box Truss Section **Heavy Duty**	76.5Kg	**3,183.20**	**3,501.52**
TR331	4m 5-Chord Box Truss Section **Heavy Duty**	63Kg	**2,715.70**	**2,987.27**
TR332	3m 5-Chord Box Truss Section **Heavy Duty**	49Kg	**2,248.10**	**2,472.91**
TR333	2m 5-Chord Box Truss Section **Heavy Duty**	36Kg	**1,780.70**	**1,958.77**
TR334	1.5m 5-Chord Box Truss Section **Heavy Duty**	26.5Kg	**1,606.70**	**1,767.37**
TR335	1m 5-Chord Box Truss Section **Heavy Duty**	22.5Kg	**1,348.90**	**1,483.79**
TR336	0.5m 5-Chord Box Truss Section **Heavy Duty**	17.5Kg	**1,140.60**	**1,254.66**
TR337	8ft 5-Chord Box Truss Section **Heavy Duty**	42Kg	**1,857.90**	**2,043.69**
TR338	6ft 5-Chord Box Truss Section **Heavy Duty**	33Kg	**1,657.70**	**1,823.47**
TR339	4ft 5-Chord Box Truss Section **Heavy Duty**	27Kg	**1,375.20**	**1,512.72**
TR340	2ft 5-Chord Box Truss Section **Heavy Duty**	20.5Kg	**1,095.30**	**1,204.83**

	ALLOY BOX TRUSS HEAVY DUTY (750MM X 500MM C-C)			
	ALLOY BOX TRUSS HEAVY DUTY (750mm x 500mm C-C) (Made with Alloy Tube 48.4 x 4.47mm)			
TR286	6m Alloy Box Truss **Heavy Duty**		**3,262.10**	**3,588.31**
TR287	4.5m Alloy Box Truss **Heavy Duty**		**2,689.60**	**2,958.56**
TR289	3m Alloy Box Truss **Heavy Duty**	53Kg	**2,117.20**	**2,328.92**
TR290	2.25m Alloy Box Truss **Heavy Duty**		**1,865.40**	**2,051.94**
TR291	1.5m Alloy Box Truss **Heavy Duty**	30Kg	**1,613.60**	**1,774.96**
TR293	0.75m Alloy Box Truss **Heavy Duty**		**1,423.70**	**1,566.07**
TR304	0.5m Alloy Box Truss **Heavy Duty**	18Kg	**1,233.60**	**1,356.96**
	JOINERS			
TR294	6 Way Joiner Section **Heavy Duty**	28Kg	**1,836.00**	**2,019.60**
	BOLTS			
TR100	Truss Bolt M16 x 65 High Tensile (4 required per join) - each		**4.00**	**4.40**

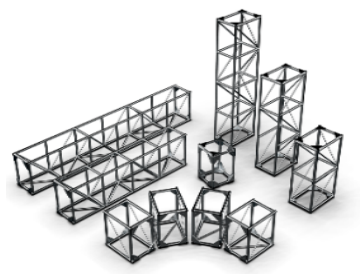

	ALLOY BOX TRUSS EXTRA HEAVY DUTY (750MM X 500MM C-C)			
	ALLOY BOX TRUSS EXTRA HEAVY DUTY (750mm x 500mm C-C) (Made with Alloy Tube 60.0 x 5.0mm)			
TR380	3m Alloy Box Truss **Heavy Duty w/ Couplings**		**4,487.50**	**4,936.25**
TR381	2.25m Alloy Box Truss **Heavy Duty w/ Couplings**		**4,305.60**	**4,736.16**
TR382	1.5m Alloy Box Truss **Heavy Duty w/ Couplings**		**3,911.30**	**4,302.43**
TR383	Flat Head Truss Pin (116 x 20mm) & R-Clip		**20.50**	**22.55**

Code	Product Description	Weight	Trade Ex-GST	Trade Inc-GST
	BASE PLATES			
	SQUARE BASE PLATES			
ST51	Plain Square Steel Base Plate (600 x 600 x 6mm)	16.56Kg	**195.60**	**215.16**
TR167	Universal Square Truss Base (600 x 600 x 6mm) Suits 300mm Tri & Box Truss	20Kg	**408.00**	**448.80**
TR183	Universal Square Truss Base (1000 x 1000 x 6mm) Suits 300mm Tri & Box Truss	50Kg	**570.80**	**627.88**
TR296	Square Base Tri Truss only (700 x 700 x 6mm) Suits 300mm Tri Truss Only	24Kg	**358.50**	**394.35**
TR400	Universal Square Truss Base (1000 x 1000 x 12mm) Suits 500H/D, 400H/D, 300mm Tri & Box	98Kg	**750.00**	**825.00**
TR71	Base Bolt & Washer		**2.00**	**2.20**
TR401	Base Bolt & Washer (M16 x 30 - suits 400H/D and 500H/D)		**2.50**	**2.75**
	ROUND BASE PLATES			
TR162	Universal Round Base Plate 650mm Diameter (Suits 200mm & 144mm Box Truss)	25.5Kg	**260.60**	**286.66**
TR225	200mm Box Truss Base Plate Adaptor - (Join 200mm Box Truss to 300mm Base Plates)	2.8Kg	**130.50**	**143.55**
TR254	Round Base Tri Truss only (1000 x 6mm) Suits 300mm Tri Truss Only	42Kg	**505.70**	**556.27**
TR56	Universal Round Truss Base (1000 x 6mm) Suits 300mm Tri & Box Truss	42Kg	**558.40**	**614.24**
TR279	Universal Round Truss Base (1200 x 8mm) Suits 300mm Tri & Box Truss	75Kg	**651.40**	**716.54**
TR71	Base Bolt & Washer		**2.00**	**2.20**
	D SHAPED BASE PLATES			
TR379	D Shaped Base Plate (1000 x 695mm) Suits 300mm Tri and Box Truss		**505.70**	**556.27**
	OVAL BASE PLATES			
TR312	Oval Base Plate (1200 x 600 x 6mm) Suits 300mm Tri Truss Only		**532.90**	**586.19**
	BOOM PIPE BASE PLATES			
ST114	Boom Pipe Base 600 x 600 x 6mm c/w Welded Centre Pipe Adaptor	16.8Kg	**254.60**	**280.06**
ST119	Boom Pipe Base 300 x 300 x 6mm c/w Welded Centre Pipe Adaptor	5.6Kg	**209.00**	**229.90**
	CLS GROUND SUPPORT			
	ALLOY BOX TRUSS 750 x 500MM C-C (Main Chords from Alloy Tube 48.4 x 4.47mm)			
GS295	4 Way Trolley Section **(750mm x 500mm Truss)**		**2,272.10**	**2,499.31**
	ALLOY BOX TRUSS 750MM & 500MM C-C (Main Chords from Alloy Tube 48.4 x 4.47mm)			
GS306	4 Way Trolley Section **(To Suit 750mm & 500mm C-C Truss)**		**2,960.60**	**3,256.66**
	ALLOY BOX TRUSS 500MM C-C (Main Chords from Alloy Tube 48.4 x 4.47mm)			
GS01	4 Way Trolley Section	24.5Kg	**2,203.20**	**2,423.52**
GS02	Lifting Plates		**144.70**	**159.17**
	ALLOY BOX TRUSS TOWER 400MM C-C (Main Chords from Alloy Tube 48.4 x 4.47mm)			
GS03	3m Tower Design Section c/w couplings	48Kg	**2,161.90**	**2,378.09**
GS23	1m Tower Design Section c/w couplings	24Kg	**1,748.80**	**1,923.68**
GS04	0.7m Tower Design Section c/w couplings	21Kg	**1,473.50**	**1,620.85**
GS18	3m Tower Design Section	42Kg	**1,838.30**	**2,022.13**
GS19	2m Tower Design Section	32Kg	**1,494.10**	**1,643.51**
GS20	1.5m Tower Design Section	28Kg	**1,339.90**	**1,473.89**
GS21	1m Tower Design Section	19Kg	**1,151.20**	**1,266.32**
GS05	Flat Head Truss Pin M16x60 & 3mm R-Clip		**16.40**	**18.04**
GS07	Steel Bases c/w 100mm Castors	25Kg	**1,086.70**	**1,195.37**
GS06	0.5m Short Leg c/w 1 Swivel Foot	6.5Kg	**358.50**	**394.35**
GS08	1.5m Legs c/w 2 Swivel Feet	17Kg	**651.40**	**716.54**
GS09	Alloy Braces c/w Coupler & Pin (1730mm C-C)	4.7Kg	**392.60**	**431.86**
GS10	1080mm Alloy Cat Heads	30kg	**1,241.40**	**1,365.54**
GS25	400/500 Alloy Adaptor Plate		**441.70**	**485.87**
GS11	M16 Bolt Sets		**4.80**	**5.28**
TR60	Cheese Head Truss Pin with Handle & M16x60 & 3mm R-Clip		**18.50**	**20.35**
TR61	3mm R-Clip		**1.00**	**1.10**
TR328	4mm R-Clip		**1.10**	**1.21**
GS24	Alloy Clevis to Single Coupler Adaptor		**104.50**	**114.95**
TR327	Flat Head Truss Pin Long Tapper M16x96 & 4mm R-Clip		**18.50**	**20.35**

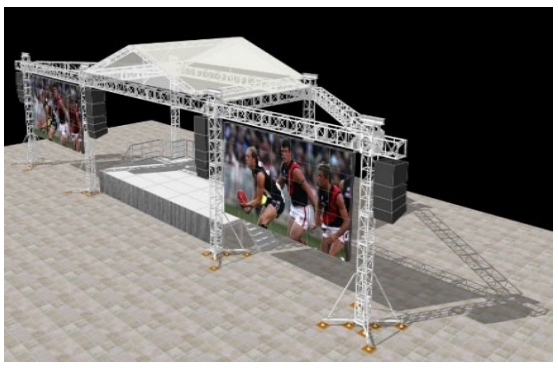

Code	Product Description	Weight	Trade Ex-GST	Trade Inc-GST
	CLS STAGE DECK			
	STAGE DECK - FORM PLY TOP			
CLSS01	Stage Deck - 2400 x 1200 x 187mm	45Kg	**1,735.00**	**1,908.50**
CLSS02	Stage Deck - 2400 x 600 x 187mm	28Kg	**1,156.80**	**1,272.48**
CLSS13	Stage Deck - 1800 x 600 x 187mm	22Kg	**1,011.20**	**1,112.32**
CLSS31	Stage Deck - 1800 x 1200 x 187mm		**1,445.20**	**1,589.72**
CLSS07	Stage Deck - 1200 x 1200 x 187mm	26Kg	**1,156.80**	**1,272.48**
CLSS15	Stage Deck - 1200 x 600 x 187mm	15Kg	**867.00**	**953.70**
CLSS32	Stage Deck - 600 x 600 x 187mm		**722.70**	**794.97**
	SEMI CIRCULAR STAGE DECK - FORM PLY TOP			
CLSS37	Semi Circular Stage Deck - 1200 x 600 x 187mm		**1,311.50**	**1,442.65**
CLSS38	Semi Circular Stage Deck - 2400 x 1200 x 187mm		**2,622.80**	**2,885.08**
CLSS74	Semi Circular Stage Deck - 1800 x 900 x 187mm		**2,112.80**	**2,324.08**
	QUARTER CIRCULAR STAGE DECK - FORM PLY TOP			
CLSS75	Quarter Circular Stage Deck - 1800 x 1800mm		**3,014.20**	**3,315.62**
	TRIANGULAR STAGE DECK - FORM PLY TOP			
CLSS105	Right Angle Triangle Stage Deck - 1200 x 1200mm		**1,260.00**	**1,386.00**
CLSS106	Equilateral Triangle Stage Deck - 1200mm (On all three sides)		**1,260.00**	**1,386.00**
	CARPETED STAGE DECK			
CLSS42	Stage Deck - 2400 x 1200 x 187mm		**1,997.40**	**2,197.14**
CLSS43	Stage Deck - 2400 x 600 x 187mm		**1,287.90**	**1,416.69**
CLSS44	Stage Deck - 1800 x 600 x 187mm		**1,142.30**	**1,256.53**
CLSS45	Stage Deck - 1800 x 1200 x 187mm		**1,674.70**	**1,842.17**
CLSS46	Stage Deck - 1200 x 1200 x 187mm		**1,353.60**	**1,488.96**
CLSS47	Stage Deck - 1200 x 600 x 187mm		**998.10**	**1,097.91**
CLSS48	Stage Deck - 600 x 600 x 187mm		**867.00**	**953.70**
	STAGE DECK - WISA HEX GRIP TOP			
CLSS08	Stage Deck - 2400 x 1200 x 188mm		**2,094.70**	**2,304.17**
CLSS09	Stage Deck - 2400 x 600 x 188mm		**1,336.60**	**1,470.26**
CLSS14	Stage Deck - 1800 x 600 x 188mm		**1,178.90**	**1,296.79**
CLSS71	Stage Deck - 1800 x 1200 x 188mm		**1,747.80**	**1,922.58**
CLSS10	Stage Deck - 1200 x 1200 x 188mm		**1,402.10**	**1,542.31**
CLSS72	Stage Deck - 1200 x 600 x 188mm		**1,022.50**	**1,124.75**
CLSS73	Stage Deck - 600 x 600 x 188mm		**868.20**	**955.02**
	800mm WIDE STEPS			
CLSS23	1 Step - 800(w) x 290(g) x 150(r) Suits 300mm Deck		**826.30**	**908.93**
CLSS88	1 Step - 800(w) x 290(g) x 200(r) Suits 400mm Deck		**826.30**	**908.93**
CLSS24	2 Step - 800(w) x 290(g) x 200(r) Suits 600mm Deck		**1,239.40**	**1,363.34**
CLSS89	3 Step - 800(w) x 290(g) x 200(r) Suits 800mm Deck		**1,239.40**	**1,363.34**
CLSS25	4 Step - 800(w) x 290(g) x 180(r) Suits 900mm Deck		**1,652.50**	**1,817.75**
CLSS90	4 Step - 800(w) x 290(g) x 200(r) Suits 1000mm Deck		**1,652.50**	**1,817.75**
CLSS55	5 Step - 800(w) x 290(g) x 200(r) Suits 1200mm Deck		**2,065.50**	**2,272.05**
	1200mm WIDE STEPS			
CLSS39	1 Step - 1200(w) x 290(g) x 150(r) Suits 300mm Deck		**905.00**	**995.50**
CLSS85	1 Step - 1200(w) x 290(g) x 200(r) Suits 400mm Deck		**905.00**	**995.50**
CLSS40	2 Step - 1200(w) x 290(g) x 200(r) Suits 600mm Deck		**1,344.30**	**1,478.73**
CLSS86	3 Step - 1200(w) x 290(g) x 200(r) Suits 800mm Deck		**1,344.30**	**1,478.73**
CLSS41	4 Step - 1200(w) x 290(g) x 180(r) Suits 900mm Deck		**1,783.70**	**1,962.07**
CLSS87	4 Step - 1200(w) x 290(g) x 200(r) Suits 1000mm Deck		**1,783.70**	**1,962.07**
CLSS50	5 Step - 1200(w) x 290(g) x 200(r) Suits 1200mm Deck		**2,222.80**	**2,445.08**
	HAND RAIL FOR STEPS			
CLSS82	1 Step Rail (Suits 400mm Deck)		**229.60**	**252.56**
CLSS51	2 Step Rail (Suits 600mm Deck)		**328.20**	**361.02**
CLSS83	3 Step Rail (Suits 800mm Deck)		**393.60**	**432.96**
CLSS52	4 Step Rail (Suits 900mm Deck)		**524.60**	**577.06**
CLSS84	4 Step Rail (Suits 1000mm Deck)		**524.60**	**577.06**
CLSS53	5 Step Rail (Suits 1200mm Deck)		**655.90**	**721.49**

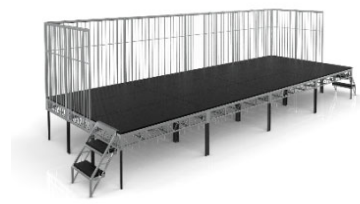

Code	Product Description	Weight	Trade Ex-GST	Trade Inc-GST
	STAGE DECK LEGS & ACCESSORIES			
CLSS78	200mm Stage Deck Leg	0.5Kg	**21.70**	**23.87**
CLSS03	300mm Stage Deck Leg	0.8Kg	**24.50**	**26.95**
CLSS79	400mm Stage Deck Leg	1.1Kg	**26.50**	**29.15**
CLSS04	600mm Stage Deck Leg	1.6Kg	**31.60**	**34.76**
CLSS80	800mm Stage Deck Leg	2.2Kg	**35.90**	**39.49**
CLSS05	900mm Stage Deck Leg	2.4Kg	**38.30**	**42.13**
CLSS81	1000mm Stage Deck Leg	2.7Kg	**42.70**	**46.97**
CLSS12	1200mm Stage Deck Leg	3.2Kg	**45.30**	**49.83**
CLSS16	Castor with Wheel for Stage Deck		**42.70**	**46.97**
CLSS29	Castor with Brake for Stage Deck		**45.10**	**49.61**
CLSS17	Insert for Stage Deck Leg (to accept castor)		**15.90**	**17.49**
CLSS54	Welded Joining Tab to accept 2nd Deck		**21.10**	**23.21**
CLSS28	Hex Head Stage Deck Joining Bolts (M10x60)		**2.40**	**2.64**
CLSS107	Wing Head Stage Deck Joining Bolts (M10x60)		**5.50**	**6.05**
CLSS108	Hex Head Bolt Set for Handrails (M10x75)		**2.60**	**2.86**
CLSS109	Hex Head Bolt Set for Steps & Velcro Strips (M10x40)		**2.20**	**2.42**
CLSS110	Leg Irons		**16.00**	**17.60**
CLSS30	Tri Wheel (2 1/8" x 3/8") **Suits Stage Deck built prior to 2021**		**3.50**	**3.85**
CLSS68	Tri Wheel (M10 x 55) **Suits Stage Deck built since 2021**		**3.50**	**3.85**
CLSS33	Adjustable Feet 10mm x 40mm Dia. - M10		**14.80**	**16.28**
CLSS34	Adjustable Feet 12mm x 60mm Dia - M12		**19.60**	**21.56**
CLSS35	Adjustable Feet M16 x 125Ø Mild Steel		**36.70**	**40.37**
CLSS36	Adjustable Feet M16 x 125Ø Stainless Steel		**48.90**	**53.79**
EC01	End Caps to suit Alloy Tube		**5.30**	**5.83**
CLSS49	90 Deg Hand/Guard Rail Joining Block		**10.70**	**11.77**
CLSS67	Stage Deck Low Rider Wheels (minimum ground clearance)		**204.80**	**225.28**
	SCREW JACK LEG ADAPTORS			
CLSS91	Twin Leg Adaptor w/ 650mm Tube	(Suits height 900 - 1300mm)	**102.50**	**112.75**
CLSS92	Twin Leg Adaptor w/ 950mm Tube	(Suits height 1200 - 1500mm)	**112.80**	**124.08**
CLSS93	Quad Leg Adaptor w/ 650mm Tube	(Suits height 900 - 1300mm)	**128.20**	**141.02**
CLSS94	Quad Leg Adaptor w/ 950mm Tube	(Suits height 1200 - 1500mm)	**138.40**	**152.24**
	ALLOY LEG FRAMES & BRACES			
CLSS95	Alloy Leg Frame to suit 1600(h) x 1200(w)mm Stage Deck		**399.80**	**439.78**
CLSS96	Alloy Leg Frame to suit 1800(h) x 1200(w)mm Stage Deck		**410.00**	**451.00**
CLSS97	Alloy Leg Frame to suit 2000(h) x 1200(w)mm Stage Deck		**420.30**	**462.33**
CLSS98	Alloy Leg Frame to suit 2200(h) x 1200(w)mm Stage Deck		**430.50**	**473.55**
CLSS99	Alloy Leg Frame to suit 2400(h) x 1200(w)mm Stage Deck		**440.80**	**484.88**
CLSS100	Alloy Brace with Snap Hooks to suit 1600(h)mm Stage Deck		**215.30**	**236.83**
CLSS101	Alloy Brace with Snap Hooks to suit 1800(h)mm Stage Deck		**220.40**	**242.44**
CLSS102	Alloy Brace with Snap Hooks to suit 2000(h)mm Stage Deck		**225.50**	**248.05**
CLSS103	Alloy Brace with Snap Hooks to suit 2200(h)mm Stage Deck		**230.70**	**253.77**
CLSS104	Alloy Brace with Snap Hooks to suit 2400(h)mm Stage Deck		**235.80**	**259.38**
	HAND RAILS			
CLSS56	1.2m Hand Rail		**328.20**	**361.02**
CLSS57	2.4m Hand Rail		**546.20**	**600.82**
	GUARD RAILS			
CLSS18	1.2m Guard Rail	10.7Kg	**545.50**	**600.05**
CLSS19	2.4m Guard Rail	20.5Kg	**910.40**	**1,001.44**
	KICK RAILS			
CLSS69	1.2m Kick Rail		**78.60**	**86.46**
CLSS70	2.4m Kick Rail		**132.00**	**145.20**
	STAGE DECK TROLLEYS			
CLSS58	4 Deck Carpeted Steel Trolley	(2500x800mm)	**2,123.20**	**2,335.52**
CLSS59	6 Deck Carpeted Steel Trolley	(2500x1200mm)	**2,385.30**	**2,623.83**
CLSS76	Carpeted Steel Trolley for transport of 4 vertically stowed decks	(2500x800mm)	**2,345.40**	**2,579.94**
CLSS77	Carpeted Steel Trolley for transport of 6 vertically stowed decks	(2500x1200mm)	**2,719.60**	**2,991.56**
	STAGE DECK SKIRTS & ACCESSORIES			
CLSS60	1.2m Aluminium Velcro Strip		**80.60**	**88.66**
CLSS61	2.4m Aluminium Velcro Strip		**135.30**	**148.83**
CLSS62	Flat Black Wool Skirt (4800x900)		**519.30**	**571.23**
CLSS63	Flat Black Wool Skirt (4800x750)		**486.90**	**535.59**
CLSS64	Flat Black Wool Skirt (4800x600)		**454.40**	**499.84**
CLSS65	Flat Black Wool Skirt (4800x300)		**405.70**	**446.27**
CLSS66	Carry Bag for Stage Skirts		**40.60**	**44.66**

Code	Product Description	Weight	Trade Ex-GST	Trade Inc-GST
	ADJUSTABLE LIGHTING LADDERS (200MM C-C SPACING)			
ALL01	Small Alloy Cart c/w 100mm Braked Castors	1000(l) x 793(w) x 310(h)mm	**1,507.70**	**1,658.47**
ALL02	Large Alloy Cart c/w 125mm Braked Castors	1195(l) x 928(w) x 330(h)mm	**1,755.50**	**1,931.05**
ALL03	2m Vertical Tube c/w holes at 200mm C-C		**104.80**	**115.28**
ALL04	725mm C-C Alloy Cross Bars		**157.20**	**172.92**
ALL05	850mm C-C Alloy Cross Bars		**157.60**	**173.36**
ALL06	Solid Joining Spigot		**48.60**	**53.46**
ALL07	12mm Shaft Locking Pin		**5.90**	**6.49**
ALL08	M12x50 Shoulder Bolt & Nyloc Nut		**5.30**	**5.83**
ALL09	M12x60 Shoulder Bolt & Nyloc Nut		**5.60**	**6.16**
ALL10	Alloy Lifting Lug c/w 16mm Hole		**102.40**	**112.64**
ALL11	Steel Lifting Lug c/w 20mm Hole		**107.80**	**118.58**
	CLS ALUMINIUM LIGHTING CARTS			
LC01	Lighting Cart w/ Ply Base, 100mm Bracked Castors & 2 fixed bars	1500(w)x600(d)x1800(h)mm	**1,453.90**	**1,599.29**
LC02	Lighting Cart w/ Ply Base, 100mm Bracked Castors & 2 adjustable bars	1500(w)x600(d)x1800(h)mm	**1,777.00**	**1,954.70**
LC03	Lighting Cart w/ Ply Base, 100mm Bracked Castors & 2 adjustable bars	1200(w)x700(d)x1800(h)mm	**1,884.70**	**2,073.17**
LC04	1200mm Adjustable Bar only		**177.90**	**195.69**
LC05	1500mm Adjustable Bar only		**194.00**	**213.40**
	CURTAIN CALL - DRAPE SUPPORT			
	TELESCOPIC POSTS			
CC01	1.0m - 1.5m Telescopic Post	(Weight 1.2Kg)	**180.00**	**198.00**
CC02	1.85m - 4.2m Telescopic Post	(Weight 4.4Kg)	**332.00**	**365.20**
CC04	2.13m - 3.6m Telescopic Post		**271.00**	**298.10**
CC03	2.46m - 6.0m Telescopic Post		**375.00**	**412.50**
	TELESCOPIC CROSS-BARS			
CC05	1.3m - 2.1m 2 Stage Telescopic Cross-Bar	(Weight 0.8Kg)	**67.00**	**73.70**
CC06	1.9m - 3.0m 2 Stage Telescopic Cross-Bar	(Weight 1.6Kg)	**84.00**	**92.40**
CC07	2.2m - 3.6m 2 Stage Telescopic Cross-Bar	(Weight 2.2Kg)	**107.00**	**117.70**
	BASE PLATES & SPIGOTS			
CC09	300 x 200 x 6mm Steel Base Plate		**47.00**	**51.70**
CC10	450 x 450 x 6mm Steel Base Plate	(Weight 7.1Kg)	**104.00**	**114.40**
CC11	600 x 600 x 6mm Steel Base Plate	(Weight 16.5Kg)	**145.00**	**159.50**
CC13	Base Plate Spigot		**33.00**	**36.30**
	STANDS & ACCESSORIES			
	PUSH UP STAND WITH CROSS BASE			
ST03	Push Up Stand Heavy Duty (1.85m - 3.30m)	7.9Kg	**373.10**	**410.41**
ST58	Push Up Stand Heavy Duty (1.25m - 2.2m)	5.5Kg	**334.70**	**368.17**
	PUSH UP STAND WITH TRI BASE			
ST80	Push Up Stand Light Duty (1.25m - 2.4m)		**248.90**	**273.79**
	PUSH UP STAND WITH STEEL SQUARE FLAT BASE			
ST89	Push Up Stand H/D c/w Flat Square Steel Base 3.3m c/w 40N.B. Adaptor - (1.85m - 3.30m)	25.7Kg	**466.40**	**513.04**
ST90	Push Up Stand H/D c/w Flat Square Steel Base 2.2m c/w 40N.B. Adaptor - (1.25m - 2.2m)	23.18Kg	**451.60**	**496.76**
	PUSH UP STAND ACCESSORIES			
ST47	Pole for Push Up Stand 3.30m (Outer & Inner Poles)	7.96Kg	**240.00**	**264.00**
ST88	Pole for Push Up Stand 2.2m (Outer & Inner Poles)	5.56Kg	**205.90**	**226.49**
ST36	Cross Base for 3.3m Push Up Stand	4.2Kg	**203.00**	**223.30**
ST52	Insert Pole for Push Up Stand		**84.60**	**93.06**
ST60	Feet to suit Push Up Stand		**4.00**	**4.40**
ST51	Square Steel Base Plate for Push Up Stand (600 x 600 x 6mm) w/o 40N.B. Adaptor		**195.60**	**215.16**
ST79	Threaded Pipe Adaptor to suit CLS Base Plate (40N.B.)	1.06Kg	**71.20**	**78.32**
ST113	Plain Pipe Adaptor to suit CLS Base Plate	2.1Kg	**93.40**	**102.74**
ST124	Spare Bolt for Pipe Adaptor		**2.50**	**2.75**
	T BARS			
ST50	1.5m T Bar (c/w 25mm Spigot)	4.6Kg	**68.30**	**75.13**
ST68	1.0m T Bar (c/w 25mm Spigot)	3.3Kg	**65.30**	**71.83**
ST84	0.75m T Bar (c/w 25mm Spigot)	2.4Kg	**65.30**	**71.83**

Code	Product Description	Weight	Trade Ex-GST	Trade Inc-GST
	WINCH UP STANDS			
ST04	4m (13ft) Winch Up Stand (100Kg W.L.L.)	20.6Kg	**1,022.30**	**1,124.53**
	WINCH UP STAND ACCESSORIES & PARTS			
ST05	Winch Up T Piece - Straight	1.7Kg	**68.30**	**75.13**
ST06	Winch Up T Piece - Offset	2Kg	**68.30**	**75.13**
ST18	Clamp Ring to suit 4m Winch Up Stand		**32.60**	**35.86**
ST07	Winch (DL-900)	(DL-900)	**86.10**	**94.71**
ST48	Winch with Brake (DLB - 800)	(DLB - 800)	**180.60**	**198.66**
ST34	Winch Latch		**13.80**	**15.18**
ST35	Winch Spring		**6.10**	**6.71**
ST63	Angled Plastic Foot		**3.30**	**3.63**
ST81	Sliding Brace Bracket		**53.80**	**59.18**
TR44	Tri Truss Winch Up Adaptor (Truss Fork) - (Suits CLS 4m Winch Up Stand)		**197.80**	**217.58**
TR203	Tri Truss Winch Up Adaptor (Truss Fork) - (Suits Penn VMB Tower Lift)		**208.20**	**229.02**
	FLOOR STANDS			
ST01	Floor Stand - (Square Tube) 25mm (h) Base - Black	0.9Kg	**37.20**	**40.92**
ST02	Floor Stand - (Round Tube) 25mm (h) Base - Black	1.4Kg	**37.20**	**40.92**
ST125	Floor Stand - (Round Tube) 40mm (h) Base - Black		**39.10**	**43.01**
	FLOOR STANDS FOR PAR 16 CANS			
ST99	Baby Floor Stands - Black (Suits Par 16 & Par 20 Cans)	1.1Kg	**31.30**	**34.43**
FB01	Flat Base Stand - Black (Suits Par 16 & Par 20 Cans)		**37.20**	**40.92**
	TRI WHEELS			
ST08	Tri Wheel (3/4 x 3/8")		**2.50**	**2.75**
ST09	Tri Wheel (1/2" x 5/16")		**2.50**	**2.75**
ST10	Tri Wheel (3/4 x 1/4")		**2.50**	**2.75**
CLSS30	Tri Wheel (2 1/8" x 3/8") **Suits Stage Deck built prior to 2021**		**3.50**	**3.85**
ST128	Tri Wheel (M10 x 20mm)		**2.50**	**2.75**
CLSS68	Tri Wheel (M10 x 55) **Suits Stage Deck built since 2021**		**3.50**	**3.85**
	CLS RIGGING ACCESSORIES			
	SPIGOTS			
ST41	3/8" BSW Spigot (100 x 19mm)	0.24Kg	**21.50**	**23.65**
ST11	12mm UNC Spigot (100 x 25mm)	0.4Kg	**21.50**	**23.65**
ST62	10mm Spigot (100 x 25mm)	0.4Kg	**21.50**	**23.65**
ST116	TV Spigot	0.52Kg	**33.20**	**36.52**
ST129	Manfrotto 5/8" x M10 Spigot		**25.70**	**28.27**
ST134	Manfrotto 5/8" Spigot Adaptor (E390)		**52.30**	**57.53**
	EYEBOLTS - Zinc (Static Loads)			
ST107	M8 Eyebolt	60g, 140Kg WLL	**4.10**	**4.51**
ST73	M10 Eyebolt	100g, 230Kg WLL	**5.15**	**5.67**
ST75	M12 Eyebolt	180g, 340Kg WLL	**5.40**	**5.94**
ST100	M16 Eyebolt	300g, 700Kg WLL	**9.50**	**10.45**
ST102	M20 Eyebolt	440g, 1200Kg WLL	**12.65**	**13.92**
	EYENUTS - Zinc (Static Loads)			
ST108	M8 Eyenut	40g, 140Kg WLL	**4.10**	**4.51**
ST74	M10 Eyenut	100g, 230Kg WLL	**5.15**	**5.67**
ST87	M12 Eyenut	160g, 340Kg WLL	**5.40**	**5.94**
ST101	M16 Eyenut	240g, 700Kg WLL	**9.50**	**10.45**
ST103	M20 Eyenut	380g, 1200Kg WLL	**12.65**	**13.92**
	EYENUTS - Orange (GR80 Rated for Lifting)			
ST149	M16 Eyenut	1.6T WLL	**36.00**	**39.60**
ST150	M20 Eyenut	2.4T WLL	**46.00**	**50.60**
	O / LINK RINGS			
OL01	O / Link Ring 6.0 - 10.0 Large Series (3.5tonne)		**18.95**	**20.85**
OL02	O / Link Ring 6.0 - 7.1 Large Series (3.5 tonne)		**14.75**	**16.23**
	GIRDER CLAMPS			
GC01	1 Tonne Girder Clamp	(Suits Flange 75 - 220mm)	**84.05**	**92.46**
GC02	2 Tonne Girder Clamp	(Suits Flange 75 - 220mm)	**101.95**	**112.15**
GC03	3 Tonne Girder Clamp	(Suits Flange 100 - 250mm)	**151.30**	**166.43**
GC04	5 Tonne Girder Clamp	(Suits Flange 125 - 270mm)	**185.00**	**203.50**
	DOUGHTY MARQUEE CLAMP			
DMC1	Doughty Marquee Clamp - SWL: 150Kg	(Suits Beams up to 110mm)	**168.10**	**184.91**

Code	Product Description	Weight	Trade Ex-GST	Trade Inc-GST
	SCREW JACK			
SJ01	Screw Jack - Fixed		**34.00**	**37.40**
SJ04	Screw Jack - Swivel		**42.00**	**46.20**
	POLYESTER ROUND BLACK SLINGS			
RS05	0.5m x 2 Tonne WLL Round Sling (Span Set) - Black		**12.75**	**14.03**
RS01	1m x 2 Tonne WLL Round Sling (Span Set) - Black		**15.80**	**17.38**
RS02	2m x 2 Tonne WLL Round Sling (Span Set) - Black		**21.00**	**23.10**
RS03	3m x 2 Tonne WLL Round Sling (Span Set) - Black		**31.55**	**34.71**
RS04	4m x 2 Tonne WLL Round Sling (Span Set) - Black		**65.15**	**71.67**
	STEEL-TEX SLINGS			
STS2	Steel-Tex Sling 0.91m x 2.4 Tonne WLL		**119.00**	**130.90**
STS1	Steel-Tex Sling 1.8m x 2.4 Tonne WLL		**181.30**	**199.43**
STS3	Steel-Tex Sling 2.7m x 2.4 Tonne WLL		**227.50**	**250.25**
	BOW SHACKLES - CHROME			
ST65	3.25 Tonne Bow Shackle	600g	**9.50**	**10.45**
ST69	2 Tonne Bow Shackle	340g	**4.80**	**5.28**
ST121	1.5 Tonne Bow Shackle		**3.65**	**4.02**
ST46	1 Tonne Bow Shackle	140g	**3.40**	**3.74**
ST27	0.75 Tonne Bow Shackle	80g	**2.95**	**3.25**
ST17	0.5 Tonne Bow Shackle	40g	**2.15**	**2.37**
	BOW SHACKLES - BLACK			
BS05	3.25 Tonne Bow Shackle		**11.00**	**12.10**
BS02	2 Tonne Bow Shackle		**7.20**	**7.92**
BS03	1.5 Tonne Bow Shackle		**6.25**	**6.88**
BS04	1 Tonne Bow Shackle		**5.35**	**5.89**
	TURNBUCKLES			
	Stainless Steel (316 Grade) (Not approved for Lifting Applications)			
TU01	M5 Turnbuckle		**4.75**	**5.23**
TU02	M6 Turnbuckle		**7.50**	**8.25**
TU03	M8 Turnbuckle		**15.00**	**16.50**
TU04	M10 Turnbuckle		**19.70**	**21.67**
TU05	M12 Turnbuckle		**28.40**	**31.24**
TU06	M16 Turnbuckle		**52.55**	**57.81**
	ALLOY / STEEL TUBE ($7.50 + GST cutting fee applies)			
ST15	Galvanised Steel Tube (48.3 x 2.3mm) per metre	2.48Kg/m	**18.00**	**19.80**
ST145	Black Steel Tube (48.3 x 2.3mm) per metre	2.61Kg/m	**18.00**	**19.80**
ST146	Black Steel Tube (48.3 x 2.9mm) per metre	3.25Kg/m	**21.50**	**23.65**
ST16	Structural Aluminium Tube (50 x 3.0mm) per metre	1.15Kg/m	**19.60**	**21.56**
ST42	Structural Aluminium Tube (48.4 x 4.47mm) per metre	1.62Kg/m	**27.00**	**29.70**
EC01	End Caps to suit tube		**5.50**	**6.05**
ST147	Weld M10 bung into Aluminium Scaffold Tube		**50.90**	**55.99**
ST148	Weld M12 bung into Aluminium Scaffold Tube		**50.90**	**55.99**
	KEE KLAMP			
	Alloy Kee Klamp			
KK01	90 Deg Alloy Kee Klamp suits 48mm Tube		**28.00**	**30.80**
KK02	T-Section **Short** Alloy Kee Klamp suits 48mm Tube		**34.90**	**38.39**
KK05	T-Section **Long** Alloy Kee Klamp suits 48mm Tube		**45.50**	**50.05**
	Steel Kee Klamp			
KK03	90 Deg Steel Kee Klamp suits 48mm Tube		**23.90**	**26.29**
KK04	T-Section **Short** Steel Kee Klamp suits 48mm Tube		**26.00**	**28.60**
	PAR BARS / BOLT SETS			
CL09	Par Bar (Black)	(4 x Lamp)	**31.10**	**34.21**
CL15	Par Bar (Chrome)	(4 x Lamp)	**45.80**	**50.38**
CL23	Par Bar (Black)	(2 x Lamp)	**19.00**	**20.90**
CL21	Bolt Sets (inc. Wing Nut & 3 Washers)	(3/8" BSW)	**2.10**	**2.31**
	ZIP CLIPS			
ZP01	2mm Zip Clip (50Kg S.W.L)		**7.90**	**8.69**
ZP02	3mm Zip Clip (120Kg S.W.L)		**9.90**	**10.89**
	WIRE ROPE (per metre)			
WR02	2mm (7x7) wire rope per metre **($20.00+GST cutting fee)**		**1.60**	**1.76**
WR03	3mm (7x7) wire rope per metre **($20.00+GST cutting fee)**		**2.10**	**2.31**
WR04	3mm (7x19) wire rope per metre **($20.00+GST cutting fee)**		**2.50**	**2.75**
WR05	4mm (7x19) wire rope per metre **($20.00+GST cutting fee)**		**2.75**	**3.03**
WR06	6mm (7x19) wire rope per metre **($20.00+GST cutting fee)**		**3.50**	**3.85**
WR00	Reel of 2mm Auslift 7x7 Gal Wire - 250m		**105.05**	**115.56**
WR10	Reel of 2mm Auslift 7x7 Gal Wire – 500m		**196.80**	**216.48**
WR11	Reel of 3mm Auslift 7x7 Gal Wire – 250m		**139.40**	**153.34**
WR09	Reel of 3mm Auslift 7x7 Gal Wire - 500m		**262.70**	**288.97**

Code	Product Description	Weight	Trade Ex-GST	Trade Inc-GST
	DROPPER BARS			
ST23	4m Dropper Bar	(Heavy Duty Chrome)	**368.10**	**404.91**
ST24	3m Dropper Bar	(Heavy Duty Chrome)	**317.40**	**349.14**
ST25	2m Dropper Bar	(Heavy Duty Chrome)	**266.50**	**293.15**
ST53	1.5m Dropper Bar	(Heavy Duty Chrome)	**220.10**	**242.11**
ST26	1m Dropper Bar	(Heavy Duty Chrome)	**169.40**	**186.34**
ST37	0.5m Dropper Bar	(Heavy Duty Chrome)	**117.20**	**128.92**
ST38	0.3m Dropper Bar	(Heavy Duty Chrome)	**103.10**	**113.41**
	SAFETY WIRES			
	2mm Safety Wires Rated @ 25Kg			
ST55	50cm Safety Wire c/w Snaphook Rated @ 25Kg		**11.60**	**12.76**
	3mm Safety Wires Rated @ 50Kg			
ST44	75cm Safety Wire c/w Snaphook Rated @ 50Kg		**14.30**	**15.73**
ST98	1m Safety Wire c/w Snaphook Rated @ 50Kg		**18.20**	**20.02**
ST130	2m Safety Wire c/w Snaphook Rated @ 50Kg		**22.00**	**24.20**
	3.2mm Black Safety Wires Rated @ 100Kg			
ST139	50cm Black Safety Wire c/w Snaphook Rated @ 100Kg		**21.50**	**23.65**
ST135	75cm Black Safety Wire c/w Snaphook Rated @ 100Kg		**22.70**	**24.97**
ST136	1m Black Safety Wire c/w Snaphook Rated @ 100Kg		**23.90**	**26.29**
ST137	1.5m Black Safety Wire c/w Snaphook Rated @ 100Kg		**26.50**	**29.15**
ST138	2m Black Safety Wire c/w Snaphook Rated @ 100Kg		**28.90**	**31.79**
	4mm Safety Wires Rated @ 100Kg			
ST72	1m Safety Wire c/w Extra Large Snaphook Rated @ 100Kg		**24.40**	**26.84**
ST29	1.5m Safety Wire c/w Extra Large Snaphook Rated @ 100Kg		**27.10**	**29.81**
ST20	2m Safety Wire c/w Extra Large Snaphook Rated @ 100Kg		**29.70**	**32.67**
	BLACK PVC COATED SAFETY WIRES			
	4mm Safety Wires (Black PVC Coated) Rated @ 100Kg			
ST117	0.50cm Black PVC Coated Safety Wire c/w Extra Large Snaphook Rated @ 100Kg		**25.20**	**27.72**
ST110	0.75cm Black PVC Coated Safety Wire c/w Extra Large Snaphook Rated @ 100Kg		**28.10**	**30.91**
ST111	1m Black PVC Coated Safety Wire c/w Extra Large Snaphook Rated @ 100Kg		**32.50**	**35.75**
ST112	2m Black PVC Coated Safety Wire c/w Extra Large Snaphook Rated @ 100Kg		**39.90**	**43.89**
	(Custom sized Safety Wires are also available)			
	SNAP HOOKS			
ST140	5 x 50mm Stainless Steel Snap Hook		**2.65**	**2.92**
ST141	6 x 60mm Stainless Steel Snap Hook		**3.00**	**3.30**
ST142	8 x 80mm Stainless Steel Snap Hook		**8.20**	**9.02**
	CARABINERS			
ST143	8 x 80mm Stainless Steel Carabiner		**10.80**	**11.88**
ST144	10 x 100mm Stainless Steel Carabiner		**15.50**	**17.05**
	CLEAR PVC COVERED WIRE ROPE SLINGS			
	10 mm Safety Wires (Clear PVC Coated) Tested & Stamped @ 990Kg WLL			
ST123	750mm - PVC Covered Wire Rope Sling		**110.00**	**121.00**
ST122	850mm - PVC Covered Wire Rope Sling		**112.00**	**123.20**
ST104	1m - PVC Covered Wire Rope Sling		**116.00**	**127.60**
ST105	1.25m - PVC Covered Wire Rope Sling		**122.50**	**134.75**
ST106	1.5m - PVC Covered Wire Rope Sling		**129.00**	**141.90**
ST115	2m - PVC Covered Wire Rope Sling		**142.00**	**156.20**
	GALVANISED WIRE ROPE SLINGS			
	6 mm Gal Wire Rope Slings - Tested & Stamped @ 490Kg WLL			
ST153	1m Gal Wire Rope Sling (Thimble each end, stamped WLL 490Kg)		**88.80**	**97.68**
ST154	2m Gal Wire Rope Sling (Thimble each end, stamped WLL 490Kg)		**91.20**	**100.32**
ST155	3m Gal Wire Rope Sling (Thimble each end, stamped WLL 490Kg)		**93.60**	**102.96**
ST156	6m Gal Wire Rope Sling (Thimble each end, stamped WLL 490Kg)		**108.00**	**118.80**
	10 mm Gal Wire Rope Slings - Tested & Stamped @ 1220Kg WLL			
ST131	1m Gal Wire Rope Sling (Thimble each end, stamped WLL 1.22T)		**96.00**	**105.60**
ST132	1.5m Gal Wire Rope Sling (Thimble each end, stamped WLL 1.22T)		**99.00**	**108.90**
ST133	2m Gal Wire Rope Sling (Thimble each end, stamped WLL 1.22T)		**102.00**	**112.20**
ST151	3m Gal Wire Rope Sling (Thimble each end, stamped WLL 1.22T)		**105.00**	**115.50**
ST152	6m Gal Wire Rope Sling (Thimble each end, stamped WLL 1.22T)		**110.50**	**121.55**

Code	Product Description	Weight	Trade Ex-GST	Trade Inc-GST
	BATTEN STRAPS			
BS01	Batten Strap - 60cm (200Kg WLL)	(Not suitable for lifting. Restraint only)	**27.80**	**30.58**
	RATCHET STRAPS - ENDLESS			
RS10	600mm Black 25mm Ratchet Strap Endless (400 Kg)		**20.50**	**22.55**
RS06	4m Black 50mm Ratchet Strap Endless (2.5 Tonne)		**29.20**	**32.12**
RS07	6m Black 50mm Ratchet Strap Endless (2.5 Tonne)		**34.50**	**37.95**
RS09	9m Black 50mm Ratchet Strap Endless (2.5 Tonne)		**40.00**	**44.00**
	RATCHET STRAPS - HOOK & KEY			
RS08	12m Black 50mm Ratchet Strap with Hook & Key		**58.20**	**64.02**
	SHOT BAGS			
MS30	Shot Bag 5 Kg - Black with handle		**37.50**	**41.25**
MS14	Shot Bag 10Kg - Black with handle		**42.00**	**46.20**
	STEEL WEIGHTS			
MS47	Steel Weight Block 25Kg	(220x155x165mm)	**84.00**	**92.40**
	SASH CORD			
MS09	Black Sash Cord per metre (6mm)		**1.90**	**2.09**
MS31	Black Sash Cord per metre (3.5mm)		**1.05**	**1.16**
MS42	Roll Black Sash Cord (6mm) - 50m Reel		**71.50**	**78.65**
MS40	Roll Black Sash Cord (6mm) - 200m Reel		**247.95**	**272.74**
MS41	Roll Black Sash Cord (3.5mm) - 500m Reel		**179.75**	**197.73**
	CABLE TIES			
MS17	Cable Ties (100mm x 2.5mm) (Black & White Available)	(Pack of 100)	**4.20**	**4.62**
MS03	Cable Ties (200mm x 4.8mm) (Black & White Available)	(Pack of 100)	**8.50**	**9.35**
MS02	Cable Ties (280mm x 4.8mm) (Black & White Available)	(Pack of 100)	**10.55**	**11.61**
MS18	Cable Ties (380mm x 4.8mm) (Black & White Available)	(Pack of 100)	**14.75**	**16.23**
MS23	Cable Ties (380mm x 7.6mm) (Black & White Available)	(Pack of 100)	**25.90**	**28.49**
	VELCRO® CABLE TIES - VELCRO®			
	Velcro Ties - Black			
MS25	Velcro Cable Ties Black - Roll of 100 Ties (25mm x 200mm)	(Roll of 100)	**89.95**	**98.95**
MS26	Velcro Cable Ties Black - Roll of 75 Ties (25mm x 300mm)	(Roll of 75)	**89.95**	**98.95**
MS43	Large Velcro Cable Ties Black - Single (25mm x 500mm)	Each	**6.85**	**7.54**
	Velcro Ties - Coloured (Available in White, Yellow, Orange, Red, Blue & Green)			
MS24	Coloured Velcro Cable - Roll of 100 Ties (25mm x 200mm)	(Roll of 100)	**89.95**	**98.95**
MS39	Coloured Velcro Cable - Roll of 75 Ties (25mm x 300mm)	(Roll of 75)	**89.95**	**98.95**
	Velcro Hook & Loop Rolls			
MS44	Black Velcro Hook Roll (25mm x 25m)	(Adhesive backing)	**112.00**	**123.20**
MS46	Black Velcro Loop Roll (25mm x 25m)	(Adhesive backing)	**112.00**	**123.20**
MS45	Black Velcro Loop Roll (25mm x 25m)	(Sew on backing)	**34.50**	**37.95**
	CHAIN BLOCKS & CHAIN BAGS			
	CHAIN BLOCKS HALF TONNE			
CB06	Chain Block - 0.5 Ton c/w 6m Lift		**182.00**	**200.20**
	CHAIN BLOCKS 1 TONNE			
CB01	Chain Block - 1 Ton c/w 6m Lift		**198.90**	**218.79**
CB04	Black Chain Block - 1 Ton c/w 8m Lift		**280.80**	**308.88**
CB03	Black Chain Block - 1 Ton c/w 10m Lift	(c/w chain bag)	**312.00**	**343.20**
CB02	Black Chain Block - 1 Ton c/w 15m Lift	(c/w chain bag)	**445.00**	**489.50**
	CHAIN BLOCKS 2 TONNE			
CB05	Chain Block 2 Ton c/w 6m Lift		**320.44**	**352.48**
	CHAIN BLOCK BAGS			
MS05	Chain Block Bags - Standard	(Up to 12m Chain)	**49.50**	**54.45**
	CLS PROJECTOR BRACKETS			
PB01	Custom Made Projector Brackets			**P.O.A.**
PB02	Projector Bracket Ceiling Mount - PRJ-102		**64.95**	**71.45**
	CLS MOTOR CONTROLLERS			
MC5i	4 Way Motor Controller c/w 4m E-Stop Pendant		**4,042.60**	**4,446.86**
MC5t	4 Way Motor Controller c/w For/Rev & 4m E-Stop		**4,257.90**	**4,683.69**
MC6i	8 Way Motor Controller c/w 4m E-Stop Pendant		**4,964.10**	**5,460.51**
MC6t	8 Way Motor Controller c/w For/Rev & 4m E-Stop Pendant		**5,179.90**	**5,697.89**
MC7	E-Stop Pendant c/w 4M flex to EP-5		**367.00**	**403.70**
MC8	EP-5 Link Cable		**172.40**	**189.64**

Code	Product Description	Weight	Trade Ex-GST	Trade Inc-GST
	CLAMPS & COUPLERS			
	HOOK CLAMPS			
CL01	19mm Hook Clamp c/w 10mm Hole	90g	**10.50**	**11.55**
CL02	25mm Hook Clamp c/w 10mm Hole	148g	**11.30**	**12.43**
CL12	32mm Hook Clamp c/w 10mm Hole	122g	**12.10**	**13.31**
CL03	50mm Hook Clamp c/w 1/2" Hole (WLL 20Kg)	330g	**13.70**	**15.07**
CL04	50mm Hook Clamp c/w 10mm Hole (WLL 20Kg)	324g	**13.70**	**15.07**
CL28	50mm Hook Clamp 300mm Long c/w 10mm Hole	566g	**24.00**	**26.40**
CL31	50mm Hook Clamp (Straight) c/w 1/2" Hole		**16.00**	**17.60**
CL08	75mm Hook Clamp c/w 10mm Hole		**18.50**	**20.35**
CL42	Purlin Hook Clamp c/w 10mm Hole		**11.50**	**12.65**
CL21	Bolt Set to suit Hook Clamps (inc. 3 x washers & wing nut)		**2.10**	**2.31**
	C HOOKS			
CL05	50mm C Hook 150mm long	478g	**16.00**	**17.60**
CL06	25 to 50mm C Hook 150mm long	403g	**19.20**	**21.12**
CL24	50mm C Hook 300mm long	857g	**24.00**	**26.40**
CL07	50mm C Hook 600mm long		**31.90**	**35.09**
CL22	50mm C Hook 1000mm long		**39.90**	**43.89**
	HEAVY DUTY HOOK CLAMPS			
CL17	50mm Heavy Duty Hook Clamp c/w 10mm hole (WLL 30Kg)	440g	**18.30**	**20.13**
CL14	50mm Heavy Duty Hook Clamp c/w ½" hole (WLL 30Kg)	443g	**18.30**	**20.13**
	T.V. CLAMP & ACCESSORIES			
CL10	T.V. Barrel Clamp to suit 48mm pipe **(100kg Rating)**	785g	**115.20**	**126.72**
CL18	Chain & Pin to suit T.V. Clamp		**10.40**	**11.44**
CL19	Lock Handles to suit T.V. Clamp		**10.40**	**11.44**
CL26	Turning Handle (Chrome Plated) Threaded		**11.60**	**12.76**
	BOOM ARMS & BRACKETS			
CL36	Zinc Plated Twisted Boom Arm Bracket (from 40 x 6mm Flat Bar)		**31.30**	**34.43**
CL36B	Black Twisted Boom Arm Bracket (from 40 x 6mm Flat Bar)		**31.30**	**34.43**
CL37	Zinc Plated Straight Boom Arm Bracket (from 40 x 6mm Flat Bar)		**31.30**	**34.43**
CL37B	Black Straight Boom Arm Bracket (from 40 x 6mm Flat Bar)		**31.30**	**34.43**
CL30	Short Boom Arm Bracket Short (from 40 x 6mm Flat Bar)		**26.90**	**29.59**
CL33	Double Hung Bracket (115mm C-C)		**38.70**	**42.57**
CL34	Display Arm (Single) 500mm		**55.00**	**60.50**
CL35	Display Arm (Double) 500mm		**59.40**	**65.34**
CL39	Pipe to Threaded Rod Adaptor		**49.60**	**54.56**
CL40	Strong Arm Pipe Adaptor		**155.10**	**170.61**
CL43	Saddle Bracket for 75 x 50mm RHS (from 40 x 6mm Flat Bar)	500Kg Vertical W.L.L	**40.00**	**44.00**
	BOOM PIPE			
BP01	Standard Boom Pipe 500mm - Black c/w Black Alloy Coupler		**111.60**	**122.76**
BP02	Standard Boom Pipe 500mm - Silver Finish c/w Alloy Coupler		**99.20**	**109.12**
BP03	Heavy Duty Boom Pipe 750mm - Black c/w 2 x Black Alloy Coupler		**198.20**	**218.02**
BP04	Heavy Duty Boom Pipe 750mm - Silver Finish c/w 2 x Alloy Coupler		**185.90**	**204.49**
	COUPLERS			
	FORGED & PRESSED COUPLERS			
ST31	Single Coupler - Forged	0.58Kg	**7.90**	**8.69**
ST83	Putlog Coupler - Pressed	0.82kg	**12.60**	**13.86**
ST32	48mm Swivel Coupler - Forged	1.18Kg	**15.75**	**17.33**
ST126	51mm Swivel Coupler - Forged	1.28Kg	**17.25**	**18.98**
ST120	Swivel Coupler - Reducing 60 x 48mm	1.48Kg	**23.20**	**25.52**
ST33	48mm Double Coupler 90 deg - Forged	1.08Kg	**13.30**	**14.63**
ST127	51mm Double Coupler 90 deg - Forged	1.28Kg	**16.60**	**18.26**
ST59	Girder Coupler - Gravlock (Fixed)	1.54Kg	**22.50**	**24.75**
ST118	Girder Coupler - Gravlock (Swivel)	1.62Kg	**33.50**	**36.85**
	PIPE JOINERS			
ST30	External Pipe Joiner	1.08Kg	**14.80**	**16.28**
ST97	Internal Pipe Joiner	1.14Kg	**13.95**	**15.35**
	PENN ALLOY COUPLERS			
ST71	Alloy Single Coupler (Rated @ 500Kg) **(Penn)**		**29.80**	**32.78**
ST14	Alloy 90 deg Fixed Double Coupler (Rated @ 500Kg) **(Penn)**		**51.90**	**57.09**
ST28	Alloy Swivel Coupler (Rated @ 500Kg) **(Penn)**		**51.90**	**57.09**

Code	Product Description		Weight	Trade Ex-GST	Trade Inc-GST
	ALLOY COUPLERS - SILVER				
AC01	20mm Alloy Light Duty Half-Coupler			**8.00**	**8.80**
AC02	25mm / 35mm Alloy Half Coupler (c/w 25mm Nylon Reducer Insert)			**23.50**	**25.85**
AC03	35mm Alloy Half Coupler	75Kg WLL		**12.60**	**13.86**
AC04	50mm Alloy Coupler	100Kg WLL		**13.00**	**14.30**
AC05	50mm Alloy Coupler w/Handle	100Kg WLL		**15.20**	**16.72**
AC06	Slim Type Half Coupler	300Kg WLL		**23.90**	**26.29**
AC07	Slip Coupler	300Kg WLL		**23.90**	**26.29**
AC08	Alloy Single Coupler c/w M10 Bolt	500Kg WLL		**30.50**	**33.55**
AC09	Alloy Single Coupler c/w M12 Bolt	500Kg WLL		**30.50**	**33.55**
AC20	Alloy Single Coupler c/w M12 Bolt	750Kg WLL		**38.40**	**42.24**
AC21	Double / Swivel Coupler (Easily Fixed in a 90Deg)	100Kg WLL		**23.90**	**26.29**
AC10	Double / Swivel Coupler (Easily Fixed in a 90Deg)	300Kg WLL		**41.70**	**45.87**
AC11	Double / Swivel Coupler (Easily Fixed in a 90Deg)	500Kg WLL		**51.70**	**56.87**
AC11PP	6mm Pin Punch (To remove split pin from double/swivel coupler)			**11.80**	**12.98**
AC12	Eye Ring Coupler 200Kg	200Kg WLL		**37.10**	**40.81**
AC23	Eye Ring Coupler 340Kg	340Kg WLL		**42.80**	**47.08**
AC13	Eye Ring Coupler 700Kg	700Kg WLL		**49.00**	**53.90**
AC15	Slim Trigger Coupler	250Kg WLL		**34.50**	**37.95**
AC16	Slim Arch Coupler	250Kg WLL		**34.50**	**37.95**
AC17	Chauvet Trigger Clamp	100Kg WLL		**35.20**	**38.72**
AC18	Spigot Coupler 500Kg	500Kg WLL		**51.20**	**56.32**
AC22	Self-Latching Claw to suit 50x3mm Tube			**40.00**	**44.00**
AC24	TV Barrel Clamp c/w 28 & 16mm Spigots			**95.00**	**104.50**
AC40	Spare M12 Bolt & Nut for Couplers			**5.00**	**5.50**
	ALLOY COUPLERS - BLACK				
AC01B	20mm Light Duty Half Coupler - Black			**8.70**	**9.57**
AC03B	35mm Light Duty Half Coupler - Black	75Kg WLL		**13.60**	**14.96**
AC04B	50mm Alloy Light Duty Half-Coupler - Black	100Kg WLL		**13.90**	**15.29**
AC05B	50mm Alloy Coupler w/Handle - Black	100Kg WLL		**16.20**	**17.82**
AC06B	Slim Type Coupler - Black	300Kg WLL		**24.90**	**27.39**
AC07B	Slip Coupler - Black	300Kg WLL		**24.90**	**27.39**
AC08B	Alloy Single Coupler Heavy Duty - Black c/w M10 Bolt	500Kg WLL		**31.80**	**34.98**
AC09B	Alloy Single Coupler Heavy Duty - Black c/w M12 Bolt	500Kg WLL		**31.80**	**34.98**
AC20B	Alloy Single Coupler c/w M12 Bolt - Black	750Kg WLL		**40.90**	**44.99**
AC21B	Double / Swivel Coupler (Easily Fixed in a 90Deg)	100Kg WLL		**25.00**	**27.50**
AC10B	Double / Swivel Coupler (Easily Fixed in a 90Deg)	300Kg WLL		**43.10**	**47.41**
AC11B	Double / Swivel Coupler (Easily Fixed in a 90Deg)	500Kg WLL		**53.00**	**58.30**
AC12B	Eye Ring Half Coupler - Black 200Kg	200Kg WLL		**38.40**	**42.24**
AC23B	Eye Ring Half Coupler - Black 340Kg	300Kg WLL		**44.90**	**49.39**
AC13B	Eye Ring Half Coupler - Black 700Kg	700Kg WLL		**51.70**	**56.87**
AC15B	Slim Trigger Coupler	250Kg WLL		**35.50**	**39.05**
AC16B	Slim Arch Coupler	250Kg WLL		**35.50**	**39.05**
AC19B	Arch Coupler - Black	150Kg WLL		**73.30**	**80.63**
AC24B	TV Barrel Clamp c/w 28 & 16mm Spigots - Black			**96.50**	**106.15**
	OMEGA CLAMP				
ST70	MAC Omega Standard Clamp			**141.80**	**155.98**
	CLS COLOUR FRAMES				
GF03	Prelude Colour Frame	(150 mm²)		**P.O.A.**	
GF15	Source Four Colour Frame	(160 mm²)		**P.O.A.**	
GF04	T' Spot Colour Frame	(165 mm²)		**P.O.A.**	
GF05	Patt 123 Colour Frame	(166 mm²)		**P.O.A.**	
GF06	Harmony Colour Frame (suits Selecon Pacific)	(185 mm²)		**P.O.A.**	
GF07	Leko Colour Frame	(190 mm²)		**P.O.A.**	
GF20	Source Four PAR Colour Frame	(190 mm²)		**P.O.A.**	
GF13	Patt 137 Colour Frame	(243 x 233 mm)		**P.O.A.**	
GF10	Cadenza Colour Frame	(245 mm²)		**P.O.A.**	
GF12	Patt 243 Colour Frame	(300 mm²)		**P.O.A.**	
	CLS PATTERN HOLDERS				
PH01	CCT Minuette - "M Size"	(hole 50mm/width 74mm)		**P.O.A.**	
PH05	Altman Leko - "B Size"	(hole 70mm/width 85mm)		**P.O.A.**	
PH07	Selecon Zoomspot 1200 - "B Size"	(hole 70mm/width 114mm)		**P.O.A.**	
PH09	T' Spot - "B Size"	(hole 70mm/width 108mm)		**P.O.A.**	
PH10	Harmony / Prelude - "B Size"	(hole 70mm/width 108mm)		**P.O.A.**	

Code	Product Description	Weight	Trade Ex-GST	Trade Inc-GST
	PAR CANS			
	PAR 16 CANS			
PLH176	Par 16 Alloy Can (Black)	inc GU10 lamp & 240v Plug	**39.40**	**43.34**
	PAR 30 CANS			
PLH172	Par 30 Alloy Can (Black)	ES Base, Wiring Set & 240v Plug	**37.00**	**40.70**
PLH171	Par 30 Alloy Can (Silver)	ES Base, Wiring Set & 240v Plug	**37.00**	**40.70**
	BARNDOORS			
PLH131	Barndoor for Par 30 - Black / Silver		**21.00**	**23.10**
PLH29	Barndoor for Par 16 - Black / Silver		**20.00**	**22.00**
	MIRRORBALLS			
	MIRROR BALLS CHROME			
PLH180	15cm Mirrorball	0.5Kg	**11.50**	**12.65**
PLH18	20cm Mirrorball	0.7Kg	**27.70**	**30.47**
PLH14	30cm Mirrorball	1.8Kg	**46.20**	**50.82**
PLH15	40cm Mirrorball	3.0Kg	**86.10**	**94.71**
PLH16	50cm Mirrorball	4.7Kg	**123.00**	**135.30**
PLH19	60cm Mirrorball w/ safety loop	9.8Kg	**372.10**	**409.31**
PLH128	75cm Mirrorball w/ safety loop	14.8Kg	**604.80**	**665.28**
PLH181	100cm Mirrorball w/ safety loop	30.8Kg	**1,400.00**	**1,540.00**
	MIRROR BALL MOTORS			
PLH17	Standard Mirror Ball Motor LMM-30 **(suits 15-20cm Mirrorball)**	Maximum Load 3Kg	**17.70**	**19.47**
PLH93	Standard Mirror Ball Motor LMM-40 **(suits up to 40cm Mirrorball)**	Maximum Load 4Kg	**27.00**	**29.70**
PLH91	Heavy Duty Mirror Ball Motor LMM-100 **(suits up to 60cm Mirrorball)**	Maximum Load 10Kg	**45.00**	**49.50**
PLH210	Extreme Mirror Ball Motor LMM-1800 **(suits up to 80cm Mirrorball)**	Maximum Load 180Kg	**430.00**	**473.00**
	MIRROR BALL MOTORS - DMX			
PLH177	H/D Mirror Ball Motor LMM-100DMX **(suits up to 50cm)**	Maximum Load 10Kg	**129.00**	**141.90**
PLH92	Super H/D Mirror Ball Motor LMM-400DMX **(suits up to 100cm)**	Maximum Load 40Kg	**199.00**	**218.90**
PLH178	Professional Mirror Ball Motor LMM-800DMXP **(suits ip to 150cm)**	DMX & Power Pass Through, Max 40Kg	**499.00**	**548.90**
	Mirror Ball Mounting Bracket			
PLH20	Mirrorball Mounting Bracket		**24.60**	**27.06**
	LED LIGHTING			
	CHAUVET BT BLUETOOTH TECHNOLOGY			
	4Bar ILS			
BT05	4Bar ILS - 432 x 0.25W RGB Lighting bar with ILS		**818.00**	**899.80**
	CHAUVET LED PAR TRI & QUADS			
	LED TRI 12 ILS			
LED173	Chauvet LED SlimPar T12ILS, 12 x 4.9W RGB LEDs, ILS Compatible		**218.00**	**239.80**
	LED QUAD 12 ILS			
LED174	Chauvet LED SlimPar Q12ILS, 12 x 6W RGBA LEDs, ILS Compatible		**273.00**	**300.30**
	LED QUAD BARNDOOR			
LEDBD1	7.5" Barndoors to suit Quad Fixtures		**137.00**	**150.70**

Code	Product Description		Weight	Trade Ex-GST	Trade Inc-GST
	LED PAR HEX - UV				
LEDUV3	Chauvet SlimPar Pro H USB (Powercon Version)	12 x 10w Hex RGBAW+UV LED's		**455.00**	**500.50**
	LED BLACKLIGHTS				
	CORE PAR UV ILS				
LEDBL6	Core Par UV ILS - 1 x COB LED UV 120 Watt			**455.00**	**500.50**
	EVE SHADOW 2 ILS				
LEDBL7	Chauvet LED Shadow 2 ILS, 18 x 3 Watt UV wash panel with ILS			**275.00**	**302.50**
	FREEDOM FLEX H4 IP				
	FREEDOM FLEX H9 IP X6				
FLEX3	Freedom Flex H6 IP x 6 Pack - Includes 6 x H9IP, 6 x Batteries Charging Case & RFC Remote - IP54			**5,000.00**	**5,500.00**
	FREEDOM FLEX BATTERY H9IP				
FLEX4	Freedom Flex Li-ion Battery			**300.00**	**330.00**
	LED BLINDERS				
	LED BLINDERS				
LEDBS1	LED Shocker 2 - Dual Zone Blinder Warm White 2 x 85W COB Led's			**638.00**	**701.80**
	LED FRESNELS				
	CHAUVET FRESNEL				
LEDFR2	EVE F-50Z 50W LED Fresnel with manual 17°-50° Zoom	c/w Barndoors & ColourFrame		**638.00**	**701.80**
	LED PROFILES				
	CHAUVET PROFILE				
LEDPR10	EVE E-50Z 50W LED Spot Fixture			**755.00**	**830.50**
LEDPR11	EVE E-100Z 100W LED Spot Fixture			**1,000.00**	**1,100.00**
	CHAUVET MOVING HEADS				
	INTIMIDATOR SPOT FIXTURES				
CMH12	**Intimidator Spot 475ZX**			**2,000.00**	**2,200.00**
	Moving Head Spot 1 x 250 Watt LED with dual rotating prisms, dual gobo, motorised zoom				
CMH13	**Intimidator Spot 360X**			**1,460.00**	**1,606.00**
	Moving Head Spot 1 x 100 Watt LED with 3-facet prism and motorised focus				
CMH14	**Intimidator Spot 260X**			**1,090.00**	**1,199.00**
	Moving Head Spot 1 x 75 Watt LED with 3-facet prism				
CMH15	**Intimidator Spot 375ZX**			**1,730.00**	**1,903.00**
	Intimidator Spot 375ZX, 1 x 200 Watt LED with dual rotating prisms and motorised zoom				
	LED FOLLOWSPOT				
FOS02	**LED FOLLOWSPOT 200ST**			**1,185.00**	**1,303.50**
	LED Followspot 200 - 200Watt Cool White LED & 7 colour wheel c/w Tripod Stand				

Code	Product Description	Weight	Trade Ex-GST	Trade Inc-GST
	LED BARS / STRIPS			
LED175	Chauvet Colorband Pix ILS - 12 x 3w Tri Colour LEDs		**365.00**	**401.50**
LED176	Chauvet Colorband H9 ILS - 9 x 10w HEX LED's		**455.00**	**500.50**
LED178	Chauvet Colorband Pix M ILS - 12 x 3w Tri Colour LEDs		**640.00**	**704.00**
	LED EFFECTS			
LED139	Chauvet LED Abyss 2 Water Effect Light		**320.00**	**352.00**
LED177	Chauvet LED Gobo Zoom 2 Projector - 70w LED with 10 holiday themed gobos		**430.00**	**473.00**
	LED PINSPOT			
LEDPIN2	Chauvet LED Pinspot 2 (3W LED with 4 coloured gels)		**55.00**	**60.50**
	LED FESTOON			
FES01	Festoon 2 RGB Festoon IP54 Rated (20 RGB Mapped Bulbs, 15m, Controller)		**755.00**	**830.50**
FES02	Festoon 2 RGB Festoon Extension IP54 Rated (20 RGB Mapped Bulbs, 15m)		**500.00**	**550.00**
	LIGHTING CONTOLLERS			
	OBEY CONTROLLERS			
CLC01	OBEY 4 / 4 Channel DMX Controller		**90.00**	**99.00**
CLC02	OBEY 10 / 8 - 16 Channel DMX Controller		**155.00**	**170.50**
CLC40	OBEY 40 / 16 Channel DMX Controller		**185.00**	**203.50**
CLC70	OBEY 70 / 14 Reversible Channel DMX Controller		**250.00**	**275.00**
	DMX CONTROL			
	DATA STREAM 4			
DAT1	Chauvet Data Stream DMX 4 Way Optical Splitter		**185.00**	**203.50**
	DATA STREAM 8			
DAT2	Chauvet Data Stream DMX 8 - DMX 2 Universe Selectable 8 Way Optical Splitter		**590.00**	**649.00**
	ARTNET DMX NODE			
ART01	Chauvet DJ DMX-AN2 Artnet DMX Node		**255.00**	**280.50**
	ACCESSORIES IRC & D-FI FIXTURES			
LED159	Remote Control for IRC-6 Fixtures		**26.50**	**29.15**
LED162	D-Fi USB - Wireless D-Fi DMX Dongle (discontinued)		**72.00**	**79.20**
LED169	D-Fi Hub - Wireless D-Fi Transceiver		**185.00**	**203.50**
LED170	D-Fi XLR Pack - Battery Powered Wireless DMX System - 1 Transmiter +3 Recievers		**410.00**	**451.00**
LED171	D-Fi XLR Transmitter		**81.00**	**89.10**
LED172	D-Fi XLR Receiver		**81.00**	**89.10**

Code	Product Description		Weight	Trade Ex-GST	Trade Inc-GST

SHOWPRO

LED PARS

LED PAR QUAD 12

LED121	LED Par Quad -12	12 x 8W Quad Colour RGBW LEDs	**596.00**	**655.60**

LED PAR QUAD 18

LED122	LED Par Quad-18	18 x 8W Quad Colour RGBW LEDs	**745.00**	**819.50**

FUSION PARS (IP65 RATED)

LEDFU3	LED Fusion PAR H7	7 x 10W Hex Colour RGBW+UV LEDs	**850.00**	**935.00**
LEDFU1	LED Fusion PAR Q12	12 x 10W Quad Colour RGBW LEDs	**895.00**	**984.50**
LEDFU2	LED Fusion PAR H12	12 x 10W Hex Colour RGBW+UV LEDs	**970.00**	**1,067.00**

LED PAR BARNDOORS

LED151	Barndoor to suit Quad 12 / Quad 18 / FusionPar H7		**113.00**	**124.30**
LED179	Barndoor to suit Fusion Par H12 / Q12		**160.00**	**176.00**

LED BLINDER

LED BLINDER II

LEDBL4	LED Blinder II - 2 x 100W COB LEDs (3000K version)		**730.00**	**803.00**
LEDBL8	LED Blinder II IP - 2 x 147W COB LEDs (2800K version) IP65 Rated		**940.00**	**1,034.00**

LED BLINDER BRACKETS

LEDBL9	LED Blinder II Bracket		**59.00**	**64.90**
LEDBL10	LED Blinder II IP 2x2 Bracket		**174.00**	**191.40**
LEDBL11	LED Blinder II IP 4x1 Bracket		**237.00**	**260.70**

LED FRESNEL

LED FRESNEL

LEDFR14	LED Fresnel FD3	(3200K, 10-60° Zoom, 100W)	**1,044.00**	**1,148.40**
LEDFR15	LED Fresnel FD4	(3200K, 15-60° Zoom, 300W)	**1,342.00**	**1,476.20**
LEDFR16	LED Fresnel 150 TW	(2700-4200K, 10-50° Zoom, 100W)	**1,163.00**	**1,279.30**
LEDFR17	LED Fresnel 250 TW	(2700-4500K, 10-60° Zoom, 250W)	**1,642.00**	**1,806.20**
LEDFR18	LED Fresnel 150 HEX	(RGBALC, 10-50° Zoom, 100W)	**1,193.00**	**1,312.30**
LEDFR19	LED Fresnel 250 HEX	(RGBALC, 10-60° Zoom, 250W)	**2,089.00**	**2,297.90**
LEDFR13	LED Fresnel RGBAL Manual Zoom	(RGBAL, 10-50° Zoom, 100W)	**1,119.00**	**1,230.90**
LEDFR4	LED Fresnel RGBAL DMX Zoom CCS3	(RGBAL, 15-45° DMX Zoom, 200W)	**1,641.00**	**1,805.10**

LED FRESNEL BARNDOORS

LEDFR20	LED Fresnel FD3 Barndoor		**115.00**	**126.50**
LEDFR21	LED Fresnel FD4 / RGBAL Barndoor		**89.00**	**97.90**
LEDFR22	LED Fresnel 150 Barndoor		**120.00**	**132.00**
LEDFR23	LED Fresnel 250 Barndoor		**140.00**	**154.00**

Code	Product Description	Weight	Trade Ex-GST	Trade Inc-GST
	LED PROFILE			
	LED PROFILE			
LEDPR04	Eclipse Profile Zoom	(RGBAL, 25-50° Zoom, 150W)	**1,491.00**	**1,640.10**
LEDPR01	LED Profile HP	(3000K, 200W)	**1,645.00**	**1,809.50**
LEDPR07	LED Profile FC	(RGBAL, 250W)	**2,089.00**	**2,297.90**
LEDPR12	LED Profile VW	(Variable White, 315W)	**2,535.00**	**2,788.50**
	LED PROFILE HP/FC/VW LENSES			
LEDPR17	LED Profile 14 Degree Lens		**495.00**	**544.50**
LEDPR02	LED Profile 19 Degree Lens		**405.00**	**445.50**
LEDPR03	LED Profile 26 Degree Lens		**405.00**	**445.50**
LEDPR13	LED Profile 36 Degree Lens		**405.00**	**445.50**
LEDPR14	LED Profile 50 Degree Lens		**405.00**	**445.50**
LEDPR15	LED Profile 15-30 Degree Lens		**895.00**	**984.50**
LEDPR16	LED Profile 25-50 Degree Lens		**895.00**	**984.50**
	LED PROFILE ACCESSORIES			
LEDPR08	LED Profile Iris		**136.00**	**149.60**
LEDPR09	LED Profile Metal Gobo Holder (B Size)		**72.50**	**79.75**
LEDPR05	Eclipse Profile Zoom Gobo Holder (M Size)		**30.00**	**33.00**
	LED CYC			
LEDCYC4	LED AuroCYC HEX IP		**1,492.00**	**1,641.20**
	LED BARS / STRIPS			
LED57	LED FusionBar Q 12		**850.00**	**935.00**
LED56	LED FusionBar Q 15 (IP Rated)		**1,342.00**	**1,476.20**
	LIGHTING & DMX CONTOLLERS			
	LED DMX CONROLLER 6 CHANNEL			
CLC05	LED DMX Conroller 6ch (Compact & Portable device)		**99.10**	**109.01**
	LED PARCANS			
SHT01	Showtec Spectral Revo 6 (120W RGBALC LED Array, 17° fixed beam angle, 12 step CCT range)		**1,186.00**	**1,304.60**
SHT02	Showtec Spectral Revo UV (100W UV LED Par, IP65, 45° beam angle)		**1,695.00**	**1,864.50**
	LED FRESNELS			
SHT03	Showtec Performer 1500 Fresnel (100W Warm White LED, 2700-4500K, Manual Zoom)		**1,685.00**	**1,853.50**
SHT04	Showtec Performer Q6 Fresnel (100W RGBALC LED Fresnel, 1800-8000K, 16 preset colours)		**1,799.00**	**1,978.90**
SHT05	Showtec Fresnel barndoor		**132.00**	**145.20**

Code	Product Description		Weight	Trade Ex-GST	Trade Inc-GST
	LED PROFILES				
INFTS260	Infinity TS-260C7 Profile Engine 260W 7 Colour LED Engine		Body without Lens	**3,666.00**	**4,032.60**
INFTS300	Infinity TS-300 Profile Engine 300W 3200K		Body without Lens	**3,200.00**	**3,520.00**
INFTS3001	Infinity TS-300 Profile Engine 300W 5700K		Body without Lens	**3,200.00**	**3,520.00**
	INFINITY LED PROFILE LENSES				
INFTL1535	Infinity TLT-1535 Zoom Lens			**640.00**	**704.00**
INFTL2550	Infinity TLT-2550 Zoom Lens			**495.00**	**544.50**
INFTL19D	Infinity TLT- 19 Degree Lens			**360.00**	**396.00**
INFTL26D	Infinity TLT- 26 Degree Lens			**370.00**	**407.00**
INFTL36D	Infinity TLT- 36 Degree Lens			**345.00**	**379.50**
INFTL50D	Infinity TLT- 50 Degree Lens			**350.00**	**385.00**
	INFINITY LED PROFILE ACCESSORIES				
INFSELA	Infinity / Selecon Lens Adaptor			**200.00**	**220.00**
INFIRIS	Infinity Iris			**186.00**	**204.60**
INFGOBO	Infinity Gobo Holder			**15.00**	**16.50**
	LED FRESNELS				
INFTF260	Inifinty TF-260C7 Frensel 260W 7 Colour LED Engine 15-50 Degree motorised zoom			**3,755.00**	**4,130.50**
INFTF300	Inifinty TF-300 Frensel 300W 3200K 15-50 Degree motorised zoom			**3,200.00**	**3,520.00**
INFTF3001	Inifinty TF-300 Frensel 300W 5700K 15-50 Degree motorised zoom			**3,200.00**	**3,520.00**
	INFINITY LED FRESNEL ACCESSORIES				
INFBARD	Infinity Barn Door			**160.00**	**176.00**
	LED CYCLORAMA				
INFCYC7	Infinity TCYC-7 LED Cyclorama 300W 7 Colour LED Engine			**3,640.00**	**4,004.00**
	LED MOVING HEAD FIXTURES				
INFS201	Infinity S201 150W 7500K 12-30 Degree Moving Spot Furion Series			**4,689.00**	**5,157.90**
INFS201RC	Infinity S201 Road Case (Fits 2 fixtures)			**2,193.00**	**2,412.30**
INFIW741	Infinity iW-741 3.6 - 60 Degree 7x40w RGBW Osram LEDs			**3,389.00**	**3,727.90**
INFIW194	Infinity iW-1941 3.6 - 60 Degree 19x40w RGBW Osram LEDs			**6,888.00**	**7,576.80**
	SINGLE CHANNEL DIMMER				
SD01	Single Channel Dimmer - DMX-512 Control			**380.00**	**418.00**
	DESIGN STENCILS				
SE759	Stencil of Selecon Luminaires 1.25 Scale			**30.00**	**33.00**
SE760	Stencil of Selecon Luminaires 1.50 Scale			**23.50**	**25.85**
	ETC				
	ETC Source Four Accessories				
ETC16	Source Four Gobo Holder **"A Size"**		(95mm with 83mm Hole)	**33.00**	**36.30**
ETC14	Source Four Gobo Holder **"B Size"**		(95mm with 70mm Hole)	**33.00**	**36.30**
ETC15	Source Four Jnr Gobo Holder **"M Size" only**			**28.00**	**30.80**

Code	Product Description	Weight	Trade Ex-GST	Trade Inc-GST
	LSC CONSOLE & DIMMERS			
	MANTRA LITE LED CONSOLE			
LSC78	Mantra Lite - Easy to use compact LED and Moving Light Controller. 24 Fixtures, 10 Playbacks, 18cm Multi-Touchscreen, 1 x XLR5 DMX/RDM output, Art-Net/sACN and dual USB. Internal 110/240v Power Supply with UPS function		3,955.00	4,350.50
	MANTRA LITE WING			
LSC41	Provides 12 additional fixture faders, 10 additional playback faders, 1 additional DMX universe and output connector. Up to two wings can be connected to a single Mantra Lite. USB powered. Includes Dust Cover		1,875.00	2,062.50
LSC42	Mantra Lite Dust Cover, hard wearing fabric with logo screened on top		100.00	110.00
LSC44	Mantra Lite Wing Dust Cover, hard wearing fabric with logo screened on top		91.00	100.10
	MDR SPLITTERS			
	Truss Mount			
LS91	MDR Splitter, 5-Way Truss Mount with 5-Pin XLR Input & Output Connectors		740.00	814.00
LS92	MDR Splitter, 5-Way Truss Mount with 5pin XLR + RDM Module		930.00	1,023.00
	Rack Mount 5 Way			
LS102	MDR Splitter, 5-Way 19" Rack Mount with 5-Pin XLR Input & Output Connectors		940.00	1,034.00
LS103	MDR Splitter, 5-Way 19" Rack Mount with 5pin XLR + RDM Module		1,130.00	1,243.00
	Rack Mount 10 Way			
LS93	MDR Splitter, 10-Way 19" Rack Mount with 5-Pin XLR Input & Output Connectors		1,200.00	1,320.00
LS94	MDR Splitter, 10-Way 19" Rack Mount with RJ45 Ethercon Input & Output Connectors		1,385.00	1,523.50
	POWERPOINT POWER DISTRIBUTION SYSTEM			
	12 X 10A Model - GPO Outlets			
PPD01	Powerpoint 12ch x 10A Power Distribution rack with RCD per channel, Fitted with 12 x 10A **GPO outlets**, three phase tail and plug.		1,875.00	2,062.50
	12 x 10A Model - Weiland Connectors			
PPD03	Powerpoint 12ch x 10A Power Distribution rack with RCD/MCB per channel, Fitted with 2 x **16 Pin Weiland connectors**, three phase tail and plug.		1,970.00	2,167.00
	12 x 10A Model - Socapex Connectors			
PPD04	Powerpoint 12ch x 10A Power Distribution rack with RCD/MCB per channel, Fitted with 2 x **19 Pin Socapex connectors**, three phase tail and plug.		1,970.00	2,167.00
	APS RACKMOUNT POWER DISTRIBUTION SYSTEM			
	12 X 10A Model - GPO Outlets			
APS01	APS 12ch x 10A Rackmount Power Distribution rack with RCD per channel, Fitted with 12 x 10A **GPO outlets**, three phase tail and plug.		3,010.00	3,311.00
	12 x 10A Model - Weiland Connectors			
APS03	APS 12ch x 10A Rackmount Power Distribution rack with RCD/MCB per channel, Fitted with 2 x **16 Pin Weiland connectors**, three phase tail and plug.		3,220.00	3,542.00
	12 x 10A Model - Socapex Connectors			
APS04	APS 12ch x 10A Rackmount Power Distribution rack with RCD/MCB per channel, Fitted with 2 x **19 Pin Socapex connectors**, three phase tail and plug.		3,220.00	3,542.00
	AVOLITES CONSOLES			
	T3 CONSOLE & WING			
AVO01	T3 Console w/carry case & 1.2m USB Type A to Locking Type C Cable		7,175.00	7,892.50
AVO02	T3 Wing w/carry case & 1.2m USB Type A to Locking Type C Cable		5,550.00	6,105.00
	T3 UNIVERSE UPDATES			
AVO03	T3 Upgrade License - 16 to 32 Universes		720.00	792.00
AVO04	T3 Upgrade License - 16 to 64 Universes		1,720.00	1,892.00

Code	Product Description	Weight	Trade Ex-GST	Trade Inc-GST
	TAPES			
	NASHUA GAFFA TAPE			
TA01	Nashua 357 Gaffa Tape x **1 Roll**	(Blk, White, Silver) 40m x 48mm	**25.40**	**27.94**
	Nashua 357 Gaffa Tape x **Box 24 Rolls**	(Blk, White, Silver) 40m x 48mm	**564.00**	**620.40**
	NASHUA MATTE GAFFA TAPE			
TA21	Nashua 500 Matte Gaffa Tape	(Black) 48mm x 40m	**29.25**	**32.18**
	Nashua 500 Matte Gaffa Tape **x Box 24 Rolls**	(Black) 48mm x 40m	**650.40**	**715.44**
TA43	Nashua 510 Matte Gaffa Tape	(Black) 48mm x 27m	**31.40**	**34.54**
	Nashua 510 Matte Gaffa Tape **x Box 24 Rolls**	(Black) 48mm x 27m	**697.20**	**766.92**
	TENACIOUS GAFFA TAPES			
	Tenacious A944 Gaffer Tape - Black			
TEN16	Tenacious A944 US Gaffer Tape - (48mm x 40m)	Grey Adhesive	**17.80**	**19.58**
	Tenacious A944 US Gaffer Tape - Box 24 Rolls	Grey Adhesive	**396.00**	**435.60**
TEN17	Tenacious A944 FAT US Gaffer Tape - (72mm x 40m)	Grey Adhesive	**26.75**	**29.43**
	Tenacious A944 FAT US Gaffer Tape - Box 24 Rolls	Grey Adhesive	**594.00**	**653.40**
	Tenacious K909 Pro Matt Gaffa Tape - Black			
TEN01	Tenacious K909 Pro Matt Gaffa Tape - (48mm x 40m)	Grey Adhesive	**17.50**	**19.25**
	Tenacious K909 - Pro Matt Gaffa Tape - Box 24 Rolls	Grey Adhesive	**379.20**	**417.12**
TEN12	Tenacious K909 Pro Matt Gaffa Tape - (72mm x 40m)	Grey Adhesive	**25.50**	**28.05**
	Tenacious K909 Pro Matt Gaffa Tape - Box 16 Rolls	Grey Adhesive	**376.00**	**413.60**
	Tenacious K969 Super Matt Gaffa Tape - Black			
TEN03	Tenacious K969 - Super Matt Gaffa Tape - (48mm x 30m)	Black Adhesive	**24.25**	**26.68**
	Tenacious K969 - Super Matt Gaffa Tape - Box 24 Rolls	Black Adhesive	**538.80**	**592.68**
	Tenacious FL166 Fluroescent Cloth Tape			
TA45	Tenacious Fluro Tape 12mm (Pink, Yellow, Orange, Green)	(12mm x 25m)	**5.25**	**5.78**
TA50	Tenacious Fluro Tape 24mm (Pink, Yellow, Orange, Green)	(24mm x 25m)	**8.25**	**9.08**
TA51	Tenacious Fluro Tape 48mm (Pink, Yellow, Orange, Green)	(48mm x 25m)	**14.00**	**15.40**
	Tenacious AT205 Foil Tape Matt Black			
TEN05	Tenacious AT205 Foil Tape Matt Black 48mm x 5m	Matt Finish, Non Reflective	**19.90**	**21.89**
	Tenacious K160 Cloth Tape			
TA46	Tenacious K160 Matt Cloth Tape (Black, Silver, White, Blue & Red Available)	(Roll Size 48mm x 25m)	**8.00**	**8.80**
	Tenacious K160 Matt Cloth Tape - Box 24 Rolls	(Roll Size 48mm x 25m)	**177.60**	**195.36**
TA53	Tenacious K160 Matt Cloth Tape (White Only)	(Roll Size 24mm x 25m)	**4.00**	**4.40**
	Tenacious K160 Matt Cloth Tape - Box 48 Rolls	(Roll Size 24mm x 25m)	**177.60**	**195.36**
	Tenacious K140 Cloth Tape (Available in Black, White, Yellow, Red, Blue, Green, Silver & Brown)			
TEN15	Tenacious K140 Mark Up Tape (12mm x 25m)	(Roll Size 12mm x 25m)	**5.25**	**5.78**
	Tenacious AT7 General Pupose Electrical Tape			
TA52	Tenacious AT7 PVC Flame Retardant Matt Black Tape	(Roll Size 48mm x 33m)	**10.00**	**11.00**
	Tenacious P743 Photographic Masking Tape			
TA54	Tenacious P743 Photographic Masking Tape - Black	(Roll Size 24mm x 55m)	**20.50**	**22.55**
TA57	Tenacious P743 Photographic Masking Tape - Black	(Roll Size 48mm x 55m)	**39.40**	**43.34**
	Tenacious AT66 PVC Protection Dance Floor Tape			
TA55	Tenacious AT66 PVC Protection Dance Floor Tape - Black	(Roll Size 48mm x 33m)	**8.50**	**9.35**
	Tenacious K740 Heritage Tape			
TEN10	Tenacious K740 Heritage Tape - Delicate Green	(Roll Size 48mm x 50m)	**16.85**	**18.54**
TEN18	Tenacious K740 Heritage Tape - Delicate Green	(Roll Size 72mm x 50m)	**24.60**	**27.06**
	Tenacious K330 Doublesided Cloth Tape			
TEN13	Tenacious K330 White Doublesided Cloth Tape	(Roll Size 24mm x 25m)	**10.50**	**11.55**
TEN14	Tenacious K330 White Doublesided Cloth Tape	(Roll Size 48mm x 25m)	**17.65**	**19.42**
	Tenacious E3410 Anti-Slip Gaffa with Luminous Strip			
TEN11	Tenacious E3410 Anti-Slip Gaffa with Luminous Strip	(Roll Size 50mm x 20m)	**52.80**	**58.08**

Code	Product Description	Weight	Trade Ex-GST	Trade Inc-GST
	CHROMAKEY TAPE			
TEN08	Chromakey Blue or Green - **(48mm x 50m)** - Rosco Brand		**69.80**	**76.78**
TEN09	Chromakey Blue or Green - **(48mm x 25m)** - Tenacious Brand PT159		**24.16**	**26.58**
	Stylus 352 Mark Up Tape (Available in Black, White, Yellow, Red, Blue, Green, Silver & Brown)			
TA35	Mark Up Tape (12mm x 25m)	(all colours)	**5.25**	**5.78**
TA07	Mark Up Tape (24mm x 25m)	(all colours)	**8.25**	**9.08**
TA04	Mark Up Tape (48mm x 25m)	(all colours)	**14.00**	**15.40**
	DANCE FLOOR TAPE (Leaves No Sticky Residue)			
TA56	Le Mark Clear Dance Floor Tape - Roll Size 48mm x 33m	(Floor Marking Tape)	**25.00**	**27.50**
	Stylus 471 Dance Floor Tape			
TA36	Black Dance Floor Tape - Roll Size 48mm x 33m	(Floor Marking Tape)	**9.80**	**10.78**
TA42	White Dance Floor Tape - Roll Size 48mm x 33m	(Floor Marking Tape)	**9.80**	**10.78**
	Rosco Dance Floor Tape			
TA41	Brown Rosco Dance Floor Tape - Roll Size 48mm x 33m	(Floor Marking Tape)	**42.00**	**46.20**
TA47	Grey Rosco Dance Floor Tape - Roll Size 48mm x 33m	(Floor Marking Tape)	**42.00**	**46.20**
TA37	White Rosco Dance Floor Tape - Roll Size 48mm x 33m	(Floor Marking Tape)	**42.00**	**46.20**
	PVC TAPE			
TA05	P.V.C. Tape **(Nitto brand)** Various colours available	(20m x 19mm)	**2.35**	**2.59**
	P.V.C. Tape **(Nitto brand - sleeve of 10)** Various colours available	(20m x 19mm)	**21.00**	**23.10**
TA40	P.V.C. Tape **(Trade Force brand)**	(20m x 19mm)	**1.30**	**1.43**
	GLOW IN THE DARK TAPE			
TA09	Merco Glow Tape - 4.5m Roll	(24mm x 4.5m)	**30.00**	**33.00**
	STYLUS 511 FLUORESCENT CLOTH TAPE			
TA26	Fluorescent Cloth Tape 1" (Pink, Yellow, Orange, Green)	(24mm x 45m)	**22.65**	**24.92**
TA31	Fluorescent Cloth Tape 2" (Pink, Yellow, Orange, Green)	(48mm x 45m)	**45.25**	**49.78**
	STYLUS 720 DOUBLE SIDED TAPE			
TA14	Stylus Double sided tape 1"	(24mm x 25m)	**11.55**	**12.71**
TA15	Stylus Double sided tape 2"	(48mm x 25m)	**23.10**	**25.41**
	STYLUS 210 SAFETY TAPE / HAZARD TAPE			
TA24	Hazard Tape (Black & Yellow)	(48mm x 25m)	**12.80**	**14.08**
	COLOUR FILTERS			
	GAMCOLOUR FILTERS			
	COLOUR FILTER			
FI01	Gamcolor Filter per Sheet **(50cm x 60cm)**	**(24" x 20")**	**33.00**	**36.30**
FI02	Gamcolor Filter per Roll **(1.2m x 7.62m)**		**290.00**	**319.00**
	LEE FILTERS			
	LEE FILTER			
	COLOUR EFFECT			
FI03	Lee Colour Filter	**(50cm x 1.22m)**	**23.00**	**25.30**
FI04	Lee Colour Filter Roll	**(7.62m x 1.22m)**	**195.00**	**214.50**
	COLOUR CORRECTION			
FI05	Lee Colour Correction Filter	**(50cm x 1.22m)**	**23.00**	**25.30**
FI06	Lee Colour Correction Filter Roll	**(7.62m x 1.22m)**	**195.00**	**214.50**
	DIFFUSION			
FI07	Lee Diffusion Filter	**(50cm x 1.22m)**	**23.00**	**25.30**
FI08	Lee Diffusion Filter Roll	**(7.62m x 1.22m)**	**195.00**	**214.50**
	HIGH TEMPERATURE			
FI16	Lee High Temp Filter Sheet	**(50cm x 1.17m)**	**29.00**	**31.90**
FI23	Lee High Temp Filter Roll - **(4m x Roll)**	**(1.17m x 4m)**	**195.00**	**214.50**

Code	Product Description	Weight	Trade Ex-GST	Trade Inc-GST
	REFLECTION MEDIA			
FI26	Lee Reflector Sheets **(271, 272, 273, 274)**	**(1.37m x 1.00m)**	**50.00**	**55.00**
FI35	Lee Reflector Roll **(271, 272, 273, 274)**	**(6.1m x 1.37m)**	**250.00**	**275.00**
	SCRIM			
FI15	Lee Scrim Sheet **(270, 275)**	**(1.37m x 1.00m)**	**80.00**	**88.00**
FI38	Lee Scrim Roll **(270, 275)**	**(6.1m x 1.37m)**	**410.00**	**451.00**
	GRID CLOTH			
FI46	Lee Grid Cloth Sheet **(430, 432)**	**(1.37m x 1.09m)**	**49.00**	**53.90**
FI45	Lee Grid Cloth Roll **(430, 432)**	**(7.62m x 1.37m)**	**310.00**	**341.00**
	POLARISER			
FI19	Lee Polariser Sheets **(239 - Half)**	**(0.48m x 0.30m)**	**135.00**	**148.50**
FI21	Lee Polariser Sheets **(239 - Full)**	**(0.48m x 0.60m)**	**245.00**	**269.50**
	HEAT SHIELD			
FI39	Heatshield Sheet **(269)**	**(1.22m x 0.53m)**	**33.00**	**36.30**
FI30	Heatshield Roll **(269)**	**(7.62m x 1.22m)**	**320.00**	**352.00**
	TOUGH SPUN			
FI31	Lee Tough Spun (Non Flame Retardant) **(214, 215, 229)**	**(7.62m x 1.22m)**	**150.00**	**165.00**
FI32	Lee Tough Spun (Flame Retardant) **(261, 262 ,263 ,264 ,265)**	**(7.62m x 1.22m)**	**225.00**	**247.50**

ROSCO FILTERS

	ROSCO CINEGEL / SUPERGEL FILTER			
FI09	Rosco Supergel per sheet	(61cm x 50cm)	**33.00**	**36.30**
FI17	Rosco Supergel per roll	(60cm x 7.62m)	**275.00**	**302.50**
	ROSCOLUX FILTER			
FI56	Roscolux Filter Roll	(60cm x 7.62m)	**240.00**	**264.00**
	POLARIZING FILTER			
FI10	Rosco Polarizing Sheet - 43cm x 50cm	(43cm x 50cm)	**155.00**	**170.50**
FI18	Rosco Polarizing Roll - 43cm x 3m	(43cm x 3m)	**695.00**	**764.50**
	SUPER HEAT SHIELD			
FI29	Super Heat Shield per sheet 50cm x 60cm	(50cm x 60cm)	**50.00**	**55.00**
FI34	Super Heat Shield per roll 60cm x 7.62m	(60cm x 7.62m)	**395.00**	**434.50**
FI33	Super Heat Shield per roll 1.2m x 7.62m	(120cm x 7.6m)	**709.00**	**779.90**
	TOUGH UV FILTER			
FI51	Tough UV Filter Sheet 50cm x 60cm	(50cm x 60cm)	**34.00**	**37.40**
FI52	Tough UV Filter Roll 60cm x 15.25m	(60cm x 7.62m)	**265.00**	**291.50**
FI53	Tough UV Filter Roll 1.2m x 7.6m	(1.2m x 7.6m)	**265.00**	**291.50**
	CINEFOIL / BLACKWRAP			
	Small Rolls			
FI42	Rosco Photofoil / Blackwrap (30cm x 3m Roll)		**44.00**	**48.40**
FI40	Rosco Photofoil / Blackwrap (60cm x 3m Roll)		**69.00**	**75.90**
FI57	Rosco Cinefoil / Blackwrap (30cm x 15m Roll)		**135.00**	**148.50**
FI58	Rosco Cinefoil / Blackwrap (60cm x 7.6m Roll)		**135.00**	**148.50**
	SWATCHBOOKS / CHINAGRAPHS			
FI27	Lee Swatch Book		**4.20**	**4.62**
FI41	Chinagraph Pencils (White only)		**4.20**	**4.62**

Code	Product Description	Weight	Trade Ex-GST	Trade Inc-GST
	CONTROL CABLES & CONNECTORS			
CCC16	Belden Data Cable (8102) per Metre - (DMX)		**5.80**	**6.38**
CCC17	Mic Cable per Metre (Hartland Cable)		**4.00**	**4.40**
CCC18	Amphenol 3 Pin XLR Inline Plug		**7.70**	**8.47**
CCC19	Amphenol 3 Pin XLR Inline Socket		**9.60**	**10.56**
CCC20	Amphenol 4 Pin Inline Plug		**11.50**	**12.65**
CCC21	Amphenol 4 Pin Inline Socket		**14.10**	**15.51**
CCC14	Amphenol 5 Pin DMX Inline Plug		**13.40**	**14.74**
CCC15	Amphenol 5 Pin DMX Inline Socket		**20.40**	**22.44**
	POWER CABLES & CONNECTORS			
	$15.00 + GST cutting fee applies to 3-core cable, $25.00+GST cutting fee applies to 5-18 core cables			
PCC34	Silicon Cable per metre	(3 X 1.00mm²)	**4.60**	**5.06**
PCC01	Silicon Cable per metre	(3 X 1.50mm²)	**7.10**	**7.81**
PCC02	Black Flex per metre	(3 X 1.00mm²)	**2.90**	**3.19**
PCC03	Black Flex per metre	(3 X 1.50mm²)	**3.60**	**3.96**
PCC06	Clipsal 439	(Male 240V)	**5.60**	**6.16**
PCC07	Clipsal 438	(Female 240V)	**10.10**	**11.11**
PCC35	Male Amphenol (Weiland Type Six Pole Connector) Complete PG-13.5 Low Profile		**48.50**	**53.35**
	c/w Entry Hood Male Insert & Piggy Gland - 6 Pole			
PCC36	Female Amphenol (Weiland Type Six Pole Connector) PG-13.5 Low Profile		**48.50**	**53.35**
	c/w Hood Coupling Female Insert & Piggy Gland - 6 Pole			
PCC28	Male Amphenol (Weiland Type Ten Pole Connector) Complete PG-16 Low Profile		**48.50**	**53.35**
	c/w Entry Hood Male Insert & Piggy Gland - 10 Pole			
PCC29	Female Amphenol (Weiland Type Ten Pole Connector) PG-16 Low Profile		**70.10**	**77.11**
	c/w Hood Coupling Female Insert & Piggy Gland - 10 Pole			
PCC11	Socapex 19 Pin Male Line Connector		**172.10**	**189.31**
PCC12	Socapex 19 Pin Female Line Connector		**161.90**	**178.09**
PCC13	Socapex 19 Pin Male Chassis Connector		**154.10**	**169.51**
PCC14	Socapex 19 Pin Female Chassis Connector		**134.40**	**147.84**
PCC15	Powerlock Set Line Source		**547.90**	**602.69**
PCC16	Powerlock Set Line Drain		**547.90**	**602.69**
PCC17	Powerlock Set Chassis Source		**547.90**	**602.69**
PCC18	Powerlock Set Chassis Drain		**547.90**	**602.69**
PCC32	GEN3 / 32A 3 Phase Plug		**90.40**	**99.44**
PCC33	GEN3 / 32A 3 Phase Socket		**104.30**	**114.73**
PCC19	Black Flex per metre (NBR / NBR)	(5 X 6.00mm²)	**13.70**	**15.07**
PCC21	Black Flex per metre (NBR / NBR) (Weiland Motor Loom Cable)	(7 X 1.50mm²)	**4.90**	**5.39**
PCC20	Black Flex per metre (NBR / NBR)	(18 X 1.50mm²)	**10.80**	**11.88**
PCC22	Black Flex per metre (NBR / NBR)	(12 x 1.5mm)	**7.80**	**8.58**
PCC30	Black Rubber Flex per metre (EPR / CPE)	(5 X 6.00mm²)	**15.70**	**17.27**
	SOCAPEX EXTENSION CABLES			
	SOCAPEX 6 WAY EXTENSION CABLES 240V - 1.5MM CABLE			
SOX10	5m - 19 Pin Socapex Extension Cable 6 Way - 240v - Made with 1.5mm Cable		**503.00**	**553.30**
SOX01	10m - 19 Pin Socapex Extension Cable 6 Way - 240v - Made with 1.5mm Cable		**587.00**	**645.70**
SOX08	15m - 19 Pin Socapex Extension Cable 6 Way - 240v - Made with 1.5mm Cable		**670.00**	**737.00**
SOX02	20m - 19 Pin Socapex Extension Cable 6 Way - 240v - Made with 1.5mm Cable		**755.00**	**830.50**
SOX09	25m - 19 Pin Socapex Extension Cable 6 Way - 240v - Made with 1.5mm Cable		**840.00**	**924.00**
SOX03	30m - 19 Pin Socapex Extension Cable 6 Way - 240v - Made with 1.5mm Cable		**920.00**	**1,012.00**
SOX04	40m - 19 Pin Socapex Extension Cable 6 Way - 240v - Made with 1.5mm Cable		**1,090.00**	**1,199.00**
SOX05	50m - 19 Pin Socapex Extension Cable 6 Way - 240v - Made with 1.5mm Cable		**1,255.00**	**1,380.50**
	SOCAPEX 6 WAY TAIL - (19 Pin Female to 6 x P/Back Plugs)			
SOX07	Socapex Tail 1.2m (Made with 1.5mm Cable)		**230.00**	**253.00**
	SOCAPEX 6 WAY HEADER - (19 Pin Male to 6 x Sockets)			
SOX06	Socapex Header 1.5m (Made with 1.5mm Cable)		**280.00**	**308.00**

Code	Product Description	Weight	Trade Ex-GST	Trade Inc-GST
	WEILAND MULTICORES			
	4 WAY WEILAND MULTICORES (1.5mm2 Cores)			
WEL01	5m Weiland Type Multicores 4 Way - 240v		**225.00**	**247.50**
WEL02	10m Weiland Type Multicores 4 Way- 240v		**280.00**	**308.00**
WEL03	15m Weiland Type Multicores 4 Way - 240v		**340.00**	**374.00**
WEL04	20m Weiland Type Multicores 4 Way - 240v		**395.00**	**434.50**
WEL05	25m Weiland Type Multicores 4 Way - 240v		**450.00**	**495.00**
WEL06	30m Weiland Type Multicores 4 Way - 240v		**505.00**	**555.50**
WEL07	40m Weiland Type Multicores 4 Way - 240v		**620.00**	**682.00**
WEL29	50m Weiland Type Multicores 4 Way - 240v		**730.00**	**803.00**
	6 WAY WEILAND MULTICORES (1.5mm2 Cores)			
WEL15	5m Weiland Type Multicores 6 Way - 240v		**295.00**	**324.50**
WEL16	10m Weiland Type Multicores 6 Way - 240v		**380.00**	**418.00**
WEL17	15m Weiland Type Multicores 6 Way - 240v		**465.00**	**511.50**
WEL18	20m Weiland Type Multicores 6 Way - 240v		**545.00**	**599.50**
WEL19	25m Weiland Type Multicores 6 Way - 240v		**630.00**	**693.00**
WEL20	30m Weiland Type Multicores 6 Way - 240v		**715.00**	**786.50**
WEL21	40m Weiland Type Multicores 6 Way - 240v		**880.00**	**968.00**
WEL30	50m Weiland Type Multicores 6 Way - 240v		**1,045.00**	**1,149.50**
	WEILAND HEADER (10 Pole Male to Sockets)			
WEL22	4 Way Weiland Header - 1.5m (10 Pole Male to 4 x Sockets)		**115.00**	**126.50**
WEL24	6 Way Weiland Header - 1.5m (10 Pole Male to 6 x Sockets)		**135.00**	**148.50**
	WEILAND TAIL (10 Pole Female to P/Back Plugs)			
WEL25	4 Way Weiland Tail - 1.5m (10 Pole Female to 4 x P/Back Plugs)		**140.00**	**154.00**
WEL27	6 Way Weiland Tail - 1.5m (10 Pole Female to 6 x P/Back Plugs)		**165.00**	**181.50**
	3 PHASE 32 AMP NBR EXTENSION CABLE			
	3 Phase 32 AMP NBR Extension Cable			
PHA01	3m 3 Phase 32amp Extension Cable **(NBR / NBR)**		**429.20**	**472.12**
PHA02	5m 3 Phase 32amp Extension Cable **(NBR / NBR)**		**452.70**	**497.97**
PHA03	10m 3 Phase 32 amp Extension Cable **(NBR / NBR)**		**511.40**	**562.54**
PHA04	15m 3 Phase 32 amp Extension Cable **(NBR / NBR)**		**570.10**	**627.11**
PHA05	20m 3 Phase 32 amp Extension Cable **(NBR / NBR)**		**628.80**	**691.68**
PHA06	25m 3 Phase 32 amp Extension Cable **(NBR / NBR)**		**687.50**	**756.25**
PHA07	30m 3 Phase 32 amp Extension Cable **(NBR / NBR)**		**746.20**	**820.82**
PHA08	40m 3 Phase 32 amp Extension Cable **(NBR / NBR)**		**863.60**	**949.96**
PHA09	50m 3 Phase 32 amp Extension Cable **(NBR / NBR)**		**981.00**	**1,079.10**
	3 PHASE 32 AMP RUBBER EXTENSION CABLE			
	3 Phase 32 AMP Rubber Extension Cable			
PHA10	3m 3 Phase 32amp Extension Cable **(RUBBER)**		**480.10**	**528.11**
PHA11	5m 3 Phase 32amp Extension Cable **(RUBBER)**		**511.40**	**562.54**
PHA12	10m 3 Phase 32 amp Extension Cable **(RUBBER)**		**591.00**	**650.10**
PHA13	15m 3 Phase 32 amp Extension Cable **(RUBBER)**		**670.20**	**737.22**
PHA14	20m 3 Phase 32 amp Extension Cable **(RUBBER)**		**748.80**	**823.68**
PHA15	25m 3 Phase 32 amp Extension Cable **(RUBBER)**		**827.10**	**909.81**
PHA16	30m 3 Phase 32 amp Extension Cable **(RUBBER)**		**906.70**	**997.37**
PHA17	40m 3 Phase 32 amp Extension Cable **(RUBBER)**		**1,064.50**	**1,170.95**
PHA18	50m 3 Phase 32 amp Extension Cable **(RUBBER)**		**1,222.30**	**1,344.53**

Code	Product Description	Weight	Trade Ex-GST	Trade Inc-GST
	MOTOR EXTENSION CABLE			
	Ordinary Duty			
ML06	10m Motor Extension Cable (6 Pole Amphenol C146)		**220.00**	**242.00**
ML15	15m Motor Extension Cable (6 Pole Amphenol C146)		**245.00**	**269.50**
ML07	20m Motor Extension Cable (6 Pole Amphenol C146)		**280.00**	**308.00**
ML12	25m Motor Extension Cable (6 Pole Amphenol C146)		**315.00**	**346.50**
ML08	30m Motor Extension Cable (6 Pole Amphenol C146)		**345.00**	**379.50**
ML09	40m Motor Extension Cable (6 Pole Amphenol C146)		**415.00**	**456.50**
ML10	50m Motor Extension Cable (6 Pole Amphenol C146)		**475.00**	**522.50**
	Heavy Duty			
ML05	10m Motor Extension Cable (6 Pole Amphenol C146)		**284.70**	**313.17**
ML16	15m Motor Extension Cable (6 Pole Amphenol C146)		**321.40**	**353.54**
ML01	20m Motor Extension Cable (6 Pole Amphenol C146)		**358.20**	**394.02**
ML11	25m Motor Extension Cable (6 Pole Amphenol C146)		**395.00**	**434.50**
ML02	30m Motor Extension Cable (6 Pole Amphenol C146)		**431.70**	**474.87**
ML03	40m Motor Extension Cable (6 Pole Amphenol C146)		**505.20**	**555.72**
ML04	50m Motor Extension Cable (6 Pole Amphenol C146)		**578.80**	**636.68**
	DMX EXTENSION CABLES & ADAPTORS			
	DMX Extension Cables 5 Pin			
DMX15	1m DMX Extension Cable - 5 Pin		**21.00**	**23.10**
DMX29	1.5m DMX Extension Cable - 5 Pin		**26.00**	**28.60**
DMX30	2m DMX Extension Cable - 5 Pin		**28.00**	**30.80**
DMX16	3m DMX Extension Cable - 5 Pin		**36.50**	**40.15**
DMX17	5m DMX Extension Cable - 5 Pin		**43.00**	**47.30**
DMX13	10m DMX Extension Cable - 5 Pin		**73.00**	**80.30**
DMX14	20m DMX Extension Cable - 5 Pin		**130.00**	**143.00**
DMX18	30m DMX Extension Cable - 5 Pin		**180.00**	**198.00**
DMX19	50m DMX Extension Cable - 5 Pin		**270.00**	**297.00**
DMX28	100m DMX Extension Cable - 5 Pin		**520.00**	**572.00**
	DMX Extension Cables 3 Pin			
DMX20	1m DMX Extension Cable - 3 Pin		**13.50**	**14.85**
DMX31	1.5m DMX Extension Cable - 3 Pin		**17.00**	**18.70**
DMX32	2m DMX Extension Cable - 3 Pin		**18.50**	**20.35**
DMX21	3m DMX Extension Cable - 3 Pin		**27.50**	**30.25**
DMX22	5m DMX Extension Cable - 3 Pin		**32.50**	**35.75**
DMX23	10m DMX Extension Cable - 3 Pin		**44.50**	**48.95**
DMX24	20m DMX Extension Cable - 3 Pin		**98.00**	**107.80**
DMX25	30m DMX Extension Cable - 3 Pin		**130.00**	**143.00**
DMX26	50m DMX Extension Cable - 3 Pin		**202.50**	**222.75**
	DMX Adaptors			
CCC24	DMX 3 to 5 Pin Male Adaptor		**7.50**	**8.25**
CCC25	DMX 5 to 3 Pin Male Adaptor		**7.50**	**8.25**
	DMX 30cm Adaptors			
CCC26	DMX 30cm Adaptor 3 Pin Male to 5 Pin Female		**17.00**	**18.70**
CCC27	DMX 30cm Adaptor 3 Pin Female to 5 Pin Male		**14.50**	**15.95**
	Amphenol DMX Terminator Plug			
DMX27	DMX Terminator Plug (3 or 5 Pin Available)		**23.50**	**25.85**
	ShowPRO DMX Terminator Plug			
DMX33	DMX Terminator Plug 3 Pin		**10.00**	**11.00**
DMX34	DMX Terminator Plug 5 Pin		**10.50**	**11.55**

Code	Product Description		Weight	Trade Ex-GST	Trade Inc-GST
	240V EXTENSION LEADS				
	EXTENSION LEADS 240V				
	(Extension Leads come with coloured grommets for length identification)				
EL01	1m Black 240v Extension Lead c/w Moulded Plug & Socket	(10amp, 3 Pin Ext, 240v Cable)		**5.50**	**6.05**
EL02	2m Black 240v Extension Lead c/w Moulded Plug & Socket	(10amp, 3 Pin Ext, 240v Cable)		**8.00**	**8.80**
EL03	3m Black 240v Extension Lead c/w Moulded Plug & Socket	(10amp, 3 Pin Ext, 240v Cable)		**10.50**	**11.55**
EL04	5m Black 240v Extension Lead c/w Moulded Plug & Socket	(10amp, 3 Pin Ext, 240v Cable)		**14.00**	**15.40**
EL05	10m Black 240v Extension Lead c/w Moulded Plug & Socket	(10amp, 3 Pin Ext, 240v Cable)		**27.00**	**29.70**
EL06	15m Black 240v Extension Lead c/w Moulded Plug & Socket	(10amp, 3 Pin Ext, 240v Cable)		**40.00**	**44.00**
EL07	20m Black 240v Extension Lead c/w Moulded Plug & Socket	(10amp, 3 Pin Ext, 240v Cable)		**51.00**	**56.10**
EL17	30m Black 240v Extension Lead c/w Moulded Plug & Socket	(10amp, 3 Pin Ext, 240v Cable)		**74.50**	**81.95**
	STRIPPED ENDS 240V 15AMP EXTENSION LEADS				
EL18	2m Black 240v Extension Lead (Stripped Ends) - Piggyback			**8.50**	**9.35**
EL19	2m Black 240v Extension Lead (Stripped Ends) - Socket			**8.50**	**9.35**
	IEC LEADS				
	IEC LEADS				
EL20	1m IEC Lead c/w Piggy Back			**5.50**	**6.05**
EL21	2m IEC Lead c/w Piggy Back			**8.00**	**8.80**
EL08	3m IEC Lead c/w Piggy Back			**9.00**	**9.90**
EL22	5m IEC Lead c/w Piggy Back			**14.50**	**15.95**
	POWERCON CABLE				
	PowerCon Extension Leads				
PC03	PowerCon Extension Lead 1.5m c/w Piggy Back Plug			**29.50**	**32.45**
PC05	PowerCon Extension Lead 3m c/w Piggy Back Plug			**34.00**	**37.40**
	PowerCon Link Cables				
PC01	1.5m PowerCon Link Cable			**53.50**	**58.85**
PC06	2m PowerCon Link Cable			**54.50**	**59.95**
PC02	3m PowerCon Link Cable			**57.50**	**63.25**
PC04	5m PowerCon Link Cable			**63.00**	**69.30**
	True1 Cables				
TRU1	1.5m True1 cable c/w Piggy Back Plug			**38.00**	**41.80**
TRU4	1.0m True1 Link Cable			**65.50**	**72.05**
TRU5	1.5m True1 Link Cable			**66.50**	**73.15**
TRU6	2.0m True1 Link Cable			**68.00**	**74.80**
TRU2	3.0m True1 Link Cable			**70.50**	**77.55**
TRU3	5.0m True1 Link Cable			**78.00**	**85.80**

Code	Product Description	Weight	Trade Ex-GST	Trade Inc-GST
	LAMPS			
	****As various tungsten lamps are currently being phased out, some lamp prices are subject to change without notice****			
	A.			
LA46	A1/233 - DYR (GY9.5) OSRAM 64686	(240V X 650W)	**19.22**	**21.14**
LA09	A1/244 - Raylight (GY9.5) 75 Hours	(240V X 500W)	**31.50**	**34.65**
LA138	GE Arcstream 150W (GE 21054)		**23.06**	**25.37**
	B.			
LA02	Blue Pinch BP1000 (250 Hours) **(Selecon Pacific)**	(1000W)	**49.20**	**54.12**
LA31	BA9s 64111 **(Desk Lamp)**	(12V X 5W)	**9.02**	**9.92**
LA101	Blacklight / UV Mercury Vapour Lamp 400w GES		**87.13**	**95.84**
	C.			
LA29	CP40 / CP71 - 1K Fresnel (G22) **OSRAM - 64747**	(240V X 1000W)	**25.63**	**28.19**
LA32	CP41 / CP73 - 2K Fresnel (G38) **OSRAM - 64789**	(240V X 2000W)	**46.13**	**50.74**
LA36	CP43 / CP72 - 2K Fresnel (GY16) **OSRAM - 64788**	(240V X 2000W)	**44.00**	**48.40**
LA130	CP91 - 2.5K (G22) **OSRAM - 64796**	(240V X 2500W)	**49.97**	**54.97**
LA131	CP92 - 2K (G22 Base) **OSRAM - 64777**	(240V X 2000W)	**47.41**	**52.15**
LA153	CP82 - (GY9.5) Philips Code: 6873P	(240V X 500W)	**19.22**	**21.14**
LA102	CP85 - 5K **OSRAM - 64805**	(240v x 5000w)	**182.70**	**200.97**
LA58	CP110 - 1.2K (G22) **(Selecon Pacific 82V)**	(80V x 1200W)	**84.56**	**93.02**
	D.			
LA07	DWE - Par 36 (Screw Terminal) **(Mole Fay)** 100 Hours	(120V X 650W)	**46.13**	**50.74**
LA21	DXX - **(Redhead)**	(240V X 800W)	**11.53**	**12.68**
LA123	DDL - (GX5.3)	(20V X 150W)	**25.63**	**28.19**
	E.			
LA73	ELC (GX5.3) 500 Hours	(24V X 250W)	**47.41**	**52.15**
	F.			
LA12	FEP - CP/77 (G9.5) (Can also use GKV 800w)	(240V X 1000W)	**25.63**	**28.19**
	G.			
LA74	GKV 600w (G9.5) 6986P **(Selcon Pacific / Multipar) 300 Hrs**	(240V x 600W)	**38.44**	**42.28**
LA143	GKV 800w (G9.5) 6982P **(Selecon SPX Ellipsoidal / Pacific) 300 Hrs**	(240V x 800W)	**51.55**	**56.71**
LA124	GU10 240v - 25Deg / 36Deg	(240V X 50W)	**10.15**	**11.17**
	H.			
LA160	HTI 150W		**174.25**	**191.68**
LA98	HTI - 300W/D5/57 - 3000 Hours	(300w)	**246.00**	**270.60**
LA30	HTI - 400W/24 - **(Lycian / PC)** 500 Hour Lamp Life	(400W)	**527.88**	**580.67**
LA103	HTI - 400 W/D3/75 - **(MAC 550)**		**284.37**	**312.81**
LA134	HTI - 700/D4/75 Double Ended- **(Martin MAC 700)**		**287.00**	**315.70**
LA78	HMI 575W/GS Double Ended (HMI 575W/DXS) **750 Hours**		**146.06**	**160.67**
LA100	HMI 575W/SE Single Ended (HMI 575W/SEL) **750 hours**		**253.18**	**278.50**
LA90	HTI 1200W/D7/60 **(MAC 2000) 750 Hours**	(1200W)	**329.00**	**361.90**
LA141	HMI 1200W/DXS		**271.25**	**298.38**
LA89	HPL 750W		**35.88**	**39.47**
LA104	HPL 575W		**37.16**	**40.88**
LA92	HLX 64610 BRL **(50 Hour Lamp)**	(12v x 50W)	**5.13**	**5.64**
LA93	HLX 64623 Longlife (Osram) **2000 Hour Lamp**	(12V X 100W)	**9.23**	**10.15**
LA170	HLX EFP 64627 (GZ6.35)	(12V X 100W)	**13.33**	**14.66**
LA79	HSD 200/60 (Osram) **(Martin Roboscan 518) 2000 Hours**		**193.73**	**213.10**
LA105	HSD 250/80 - 3000 Hours **(MAC 250, Vary Scan Special / Plus)**		**148.63**	**163.49**
LA117	HQI-T 150W **(Absract VR8)**		**58.43**	**64.27**
	K.			
LA118	K11 QI 200W **(Selecon Hui / Lui)**	(240V X 200W)	**9.02**	**9.92**
LA119	K9 QI 300W **(Selecon Hui / Lui)**	(240V X 300W)	**9.23**	**10.15**
LA120	K1 QI 500W **(Selecon Hui / Lui)**	(240V X 500W)	**9.02**	**9.92**
LA109	K4 QI 1000W **(Selecon Hui / Lui)**	(240V X 1000W)	**18.04**	**19.84**

Code	Product Description	Weight	Trade Ex-GST	Trade Inc-GST
	M.			
LA127	Martin Atomic Strobe Lamp (Also suits Max Strobe 2500)		**62.73**	**69.00**
LA147	M/40 - Philips 6877P - GY9.5	(240V X 500W)	**20.50**	**22.55**
LA62	M/38 - GY9.5 2000 Hours	(240V X 300W)	**12.30**	**13.53**
	MSR Lamps			
LA84	MSR 575/2 - Single Ended **(Mac 500 / 600) 750 Hours**		**295.00**	**324.50**
LA52	MSR-700 - MSR700SA Short Arc Single Ended	(700W)	**452.38**	**497.62**
LA146	MSR GOLD 700/2 Mini Fast Fit	(700W)	**503.53**	**553.88**
LA162	MSR GOLD 1000 Mini Fast Fit	(1000W)	**444.59**	**489.05**
LA63	MSR-1200 (G22 Base)	(1200W)	**552.22**	**607.44**
LA163	MSR-1200/2 (G22 Base)	(1200W)	**538.13**	**591.94**
	MSD Lamps			
LA80	MSD 200 - Philips		**202.80**	**223.08**
LA85	MSD 250 -2 (Philips) **(Mac 250) 2000 Hours**		**221.66**	**243.83**
	MSD Platinum Lamps			
LA158	MSD Platinum 2R		**434.34**	**477.77**
LA156	MSD Platinum 5R - **(suits Clay Paky Sharpy)** (189w)		**513.78**	**565.16**
LA157	MSD Platinum 11R		**399.00**	**438.90**
LA23	MR 16/Halogen - Down Light	(12V X 20W)	**10.15**	**11.17**
LA24	MR 16/Halogen - Down Light	(12V X 50W)	**10.15**	**11.17**
LA87	MR 16 Coloured (only Green & Yellow available)	(12V X 50W)	**23.58**	**25.94**
	P.			
	Par 56 - 240V			
LA10	Par 56 - MFL	(240V X 300W)	**69.19**	**76.11**
LA161	Par 56 - NSP	(240V X 300W)	**69.19**	**76.11**
	PAR 64 - 120V VERSION			
LA11	Par 64 - MFL 4000 Hours	(120V X 1000W)	**63.55**	**69.91**
LA41	Par 64 - NSP 4000 Hours	(120V X 1000W)	**63.55**	**69.91**
LA27	Par 64 (GE) - FFN - VNSP	(120V X 1000W)	**65.40**	**71.94**
	PAR 64 - 240V VERSION			
LA40	Par 64 CP/61 - NSP 300 hours	(240V X 1000W)	**47.25**	**51.98**
LA56	Par 64 CP/60 - VNSP 300 Hours	(240V X 1000W)	**47.25**	**51.98**
LA57	Par 64 CP/62 - MFL 300 Hours	(240V X 1000W)	**79.75**	**87.73**
LA65	Par 30 - Halogen (Spot) 100W	(240V X 100W)	**25.63**	**28.19**
LA159	Par 30 LED (Dimmable) 10.5W	(240V X 10.5W)	**31.50**	**34.65**
LA15	P2/7 - Cyc Unit 1000w	(240V X 1000W)	**14.09**	**15.50**
LA114	P2/12 - Cyc Unit 1250w	(240V X 1250W)	**17.94**	**19.73**
LA38	P2/20 - Cyc Unit 1000w	(240V X 1000W)	**16.66**	**18.33**
LA115	P2/11 - Cyc Unit 800w **(Selecon Hui Cyc Unit)**	(240V X 800W)	**11.53**	**12.68**
	Q.			
LA151	QI 100 - Cyc Unit	(240V X 100W)	**11.28**	**12.41**
LA59	QI 300 - Cyc Unit	(240V X 300W)	**6.41**	**7.05**
LA16	QI 500 K1- Cyc Unit	(240V X 500W)	**9.02**	**9.92**
LA140	QXL 750W / 77V **(ETC Source Four Revolution)**	(77V x 750W)	**107.63**	**118.39**
	T.			
LA75	TLD - U.V. Tube 2ft (18W / 08)	18W	**36.08**	**39.69**
LA03	T/11, T/19 - (GX9.5) **750 Hours**	(240V X 1000W)	**28.50**	**31.35**
LA82	T/21- GX9.5 (Philips Code: PHI6998P)	(240V X 650W)	**48.48**	**53.33**
LA55	T/24, T/17 - (P28S) - (Philips Code: PHI6800C) **750 Hours**	(240V X 500W)	**44.08**	**48.49**
LA20	T/25, T/18 - Minuette (GY9.5) (Philips Code: PHI6820P)	(240V X 500W)	**33.31**	**36.64**
LA04	T/26, T/27 - Minuette (GY9.5) **400 Hours (Philips Code: 6823P)**	(240V X 650W)	**33.31**	**36.64**
LA33	T/29 - (GX9.5) **400 Hours**	(240V X 1200W)	**39.72**	**43.69**
	Numeric.			
LA05	4515 (GE) - **(Par 36 Pinspot) (100 Hours)**	(6V X 30W)	**26.25**	**28.88**
LA81	4545 (GE) - 100H LAMP	(12V X 100W)	**49.20**	**54.12**
LA06	4552 (GE) - Par 64 ACL 28v x 250W	(28V X 250W)	**73.80**	**81.18**
LA19	4553 (GE) - Par 46 ACL 28v x 250W	(28V X 250W)	**26.65**	**29.32**
LA110	64514 - Osram 120v x 300w	(120v x 300W)	**30.75**	**33.83**
LA111	64515 - Osram 240v x 300w	(240v x 300W)	**22.50**	**24.75**

Code	Product Description	Weight	Trade Ex-GST	Trade Inc-GST
	LAMP BASES & FUSES			
	LAMP BASES			
LB08	GX9.5 Lamp Base (Suits Selecon Rama 1.2K Fresnels)	**(GX9.5)**	**83.90**	**92.29**
LB06	GY9.5 Minuette Lamp Base (Suits Selecon Acclaim Fresnels)	**(GY9.5)**	**71.80**	**78.98**
LB10	GY16 Lamp Base (Suits Selecon Arena 2K)	**(GY16)**	**97.20**	**106.92**
LB19	GKV Lamp Base (Suits Selecon Pacific 600W)	**(G9.5)**	**84.80**	**93.28**
LB20	GKV Lamp Base (Suits Selecon Axial 600w)	**(G9.5)**	**73.50**	**80.85**
LB18	Blue Pinch Lamp Base (Suits Selecon Pacific 1K)	**(GY9.5)**	**84.80**	**93.28**
LB21	R7 Lamp Base (Suits Aurora Cyc Range) (Sold as a Pair)	**(R7)**	**33.90**	**37.29**
LB09	Par 64 Ceramic Terminal Block		**8.00**	**8.80**
	FUSES & FADERS			
LB07	Ceramic Fuse	(10 Amp, 32mm)	**1.70**	**1.87**
LB04	Ceramic Fuse	(10 Amp, 25mm)	**1.70**	**1.87**
LB05	Ceramic Fuse	(10 Amp, 20mm)	**1.70**	**1.87**
LB02	Fuse Holder for Jands 4 Pack		**20.40**	**22.44**
LB13	Fuse Holder to suit Jands Road Pak (12 Channel Dimmer)		**27.20**	**29.92**
LB15	Fader for Jands 4 Pak		**17.00**	**18.70**
LB16	Fader for Jands Event Console		**17.00**	**18.70**
	SMOKE, HAZE & BUBBLE FLUIDS			
	CLS SMOKE FLUID			
	CLS MAJOR SMOKE FLUID			
FF01	Major Smoke Fluid 5 Litre	(5 Litre Container)	**57.60**	**63.36**
FF02	Major Smoke Fluid 25 Litre	(25 Litre Container)	**224.40**	**246.84**
	CLS HQ HEAVY FOG FLUID			
FF26	HQ Heavy Fluid 5 Litre	(5 Litre Container)	**69.10**	**76.01**
FF27	HQ Heavy Fluid 25 Litre	(25 Litre Container)	**292.10**	**321.31**
	CLS HAZE FLUID			
	CLS UNIQUE HAZER FLUID			
FF43	Unique Hazer Fluid - 5 Litre **(suitable for Unique Hazer)**		**82.10**	**90.31**
FF41	Unique Hazer Fluid - 25 Litre **(suitable for Unique Hazer)**		**302.10**	**332.31**
	CLS DIFFUSION FLUID			
FF04	CLS Diffusion Fluid 5 Litre **(suitable for Robe 400FT & DF50)**		**122.40**	**134.64**
FF30	CLS Diffusion Fluid 25 Litre **(suitable for Robe 400FT & DF50)**		**467.50**	**514.25**
	SWEFOG HAZE FLUID			
SWEK1FL	Fog-Swe K1 Fluid 3 Litre	(Suitable for Swefog K1)	**100.00**	**110.00**
	CHAUVET SMOKE & HAZE FLUIDS			
	Haze Fluid			
MM01	Chauvet HF5 Haze Fluid - Water Based Haze Fluid - 5 Litre	(Suitable for Hurricane Haze)	**64.00**	**70.40**
	Smoke Fluid			
MM02	Chauvet FF5 Smoke Fluid - 5 Litre	(Suitable for Hurricane Smoke)	**55.00**	**60.50**
	Geyser Fluid			
MM04	Chauvet QDF5 Fast Dissipating Geyser Fluid - 5 Litre	(Suitable for Geyser Machines)	**55.00**	**60.50**
	MARTIN FLUIDS			
MF01	Rush Smoke Fluid 5 Litre	(Suitable for RUSH 650 & 850)	**68.00**	**74.80**
MF02	Pro Fog Fluid 5 Litre	(Suitable for ZR25, 35, 45)	**80.00**	**88.00**
MF04	Pro Smoke Heavy Fog B2 Fluid 5 Litre	(Suitable for ZR45)	**140.00**	**154.00**
MF05	Rush Haze Fluid 2.5 Litre	(Suitable for Hazer Pro)	**37.00**	**40.70**
	BUBBLE FLUIDS			
	BUBBLE FLUID			
FF51	Chauvet BF5 High Performance Bubble Fluid - 5 Litre	(5 Litre Container)	**36.00**	**39.60**

Code	Product Description	Weight	Trade Ex-GST	Trade Inc-GST
	SMOKE, HAZE & BUBBLE MACHINES			
	SWE FOG & HAZE MACHINES			
SWEK1	K1 Hazer		3,250.00	3,575.00
	LOOK SOLUTIONS			
SM04	Unique Hazer 2.1		2,990.00	3,289.00
	JEM FOG & HAZE MACHINES			
SM86	ZR-25 Fogger		1,968.50	2,165.35
SM87	ZR-35 Fogger		2,240.00	2,464.00
SM88	ZR-45 Fogger Hi Mass Fogger		2,840.00	3,124.00
	ROBE HAZERS			
SM50	Robe Haze 400FT Professional Hazer		1,899.00	2,088.90
	CHAUVET SMOKE			
CH06	**Chauvet Hurricane 1200** 1180w Smoke Machine		265.00	291.50
CH07	**Chauvet Hurricane 1600** 1580w Smoke Machine		365.00	401.50
CH09	**Chauvet Geyser P5** RGB 670 Watt Penta Colour Vertical Smoke Machine		590.00	649.00
CH10	**Chauvet Geyser P7** 1290W Penta Colour (RGBA+UV) Vertical Smoke Machine with two LED Zones		820.00	902.00
	CHAUVET HAZE			
CH03	**Chauvet Hurricane Haze 2D** (Water-Based Haze Machine) (Supplied with Timer Remote)		545.00	599.50
CH08	**Chauvet Hurricane Haze 4D** (Water-Based Haze Machine) (Includes Wired Timer Remote)		710.00	781.00
	BUBBLE MACHINES			
SM53	Chauvet B-250 Bubble Machine		155.00	170.50
SM108	Chauvet B-550 Professional Bubble Machine c/w 3 x Double Wands		275.00	302.50
	HURRICANE BUBBLE HAZE			
HB01	3-in-1 Atmospheric Machine - Bubbles, Haze or Haze Filled Bubbles		790.00	869.00
	DRY ICE MACHINE			
DI01	Chauvet Nimbus Dry Ice Machine		1,365.00	1,501.50
	GREAT AMERICAN MARKET			
	GREAT AMERICAN GOBO PATTERNS			
GAM01	Gobo Patterns	(A, B, D, E, G, M, & V Patterns)	45.00	49.50

Code	Product Description	Weight	Trade Ex-GST	Trade Inc-GST
	ROSCO PRODUCTS			
	LIMITED STOCK ON HAND, ADDITIONAL FORWARD SHIPPING COSTS MAY APPLY			
RP02	Rosco Metal Gobos (All Standard Sizes)	(A, B & M Size)	**45.00**	**49.50**
	FLUORESCENT PAINT			
RP08	Fluorescent Paint 0.95L		**120.00**	**132.00**
RP73	Fluorescent Paint 3.79L		**340.00**	**374.00**
	FOAMCOAT			
RP60	Foamcoat - 3.79L		**230.00**	**253.00**
	CHROMA KEY			
RP83	Chroma Key Video Paint - 3.79L - Blue or Green		**235.00**	**258.50**
RP84	Chroma Key Video Paint - 19L - Blue or Green		**990.00**	**1,089.00**
	DIGICOMP HD			
RP85	DigiComp HD Digital Green - 3.79L		**310.00**	**341.00**
	SUPERSATURATED PAINT (Rear Projection Screen & Dance Floor)			
RP38	Supersaturated Paint - 0.95L - Colour		**130.00**	**143.00**
RP80	Supersaturated Paint - 0.95L - Black		**130.00**	**143.00**
RP82	Supersaturated Paint - 5L - Black or White Only		**305.00**	**335.50**
RP86	Supersaturated Paint - 5L - Colour		**379.00**	**416.90**
	OFF BROADWAY PAINT			
	Colour			
OB01	Off Broadway Paint 0.95L - Colour		**80.00**	**88.00**
OB02	Off Braodway Paint 3.79L - Colour		**155.00**	**170.50**
	Metallic			
OB03	Off Broadway Paint 0.95L - Metallic *CLEARANCE*		**70.00**	**77.00**
OB04	Off Broadway Paint 3.79L - Metallic *CLEARANCE*		**199.00**	**218.90**
	TOUGH PRIME			
RP58	Tough Prime 3.79L (White & Black Available)		**180.00**	**198.00**
RP59	Tough Prime 19L (White & Black Available)		**740.00**	**814.00**
	TV PAINT			
RP76	TV White - 3.79L		**190.00**	**209.00**
RP77	TV Black - 3.79L		**190.00**	**209.00**
	FLAMEX FLAME RETARDANTS			
RP52	Roscoflamex NF - 3.8 Litres - Natural Fiber		**210.00**	**231.00**
RP53	Roscoflamex SF - 3.8 Litres - Synthetic Fiber		**210.00**	**231.00**
RP54	Roscoflamex DF - 3.8 Litres - Delicate Fiber		**210.00**	**231.00**
RP69	Roscoflamex DF - 19 Litres - Delicate Fiber		**740.00**	**814.00**
RP55	Roscoflamex PC - 3.8 Litres - Paper & Cardboard		**210.00**	**231.00**
RP56	Roscoflamex WD - 3.8 Litres - Wood		**210.00**	**231.00**
RP71	Roscoflamex WD - 19 Litres - Wood		**740.00**	**814.00**
RP78	Roscoflamex MC - 3.8 Litres - Multi Substrate		**220.00**	**242.00**
RP25	Roscoflamex PA - Paint Additive (0.23L)		**65.00**	**71.50**

Code	Product Description	Weight	Trade Ex-GST	Trade Inc-GST
	LIGHTING TOOLS			
	RIGGING GLOVES			
LT04	Rigging Gloves		**31.52**	**34.67**
	PODGER			
LT05	Podger 19 x 24mm (240mm in length) - Short		**44.13**	**48.54**
LT11	Podger 19 x 24mm (360mm in length) - Long		**78.80**	**86.68**
LT06	Podger Holder		**45.00**	**49.50**
	LED TORCH			
LT09	LED White Torch - 3W		**21.00**	**23.10**
	WIRE ROPE CUTTERS			
WR01	HIT Wire Rope Cutters		**57.78**	**63.56**

CONDITIONS OF SALE

PRICES

Prices are subject to change without notice.
Rosco Products will incur added freight fees if not in stock.

FREIGHT

Freight to be carried out using Concert Lighting Systems nominated freight carrier at customer's cost unless otherwise specified.

GOODS RETURN POLICY

Prior arrangement to be made with Concert Lighting Systems before goods can be returned.
For any goods returned more than 7 days from delivery a 20% re-stocking fee will be charged to the customer's account.

PASSING OF PROPERTY

All goods remain the property of Concert Lighting Systems Australia P/L until full payment is made by the purchaser.

ACCOUNT TERMS

All accounts are to be paid within 30 days from the date of the invoice.
Any overdue accounts will be subject to Stop Credit without notice.
Concert Lighting Systems Australia Pty Ltd has the right to review customer accounts at anytime.